METER SOCKETS AND EVEMS

MICROLECTRIC®

METER SOCKETS AND EVEMS

TABLE OF CONTENTS

20 A 600 V – CL, CT, CT-SWL series	04
100 A 600 V – BA3 series	07
125 A 600 V king size – BE1 series	08
100 A per position 200 A 600 V – BE2, BEC series	09
100 A 600 V polyphase – PL17 series	11
100 A 120/240 V – CO1 series	12
100 A per position 120/240 V – CO1 multi-gang	13
100 A 120/240 V – HD series	15
Highly corrosion-resistant meter sockets	16
200 A 600 V – BQ, BP, BS2, MO2 series	18
200 A per position 200 A 600 V – BD, BDA, BDC, BS4 series	27
200 A per position 400 A 600 V – BSC4-G series	31
200 A 600 V polyphase – PL27 series	32
200 A 120/240 V – CO2 series	33
200 A 120/240 V – CO22, CO23, CO24 series	34
200 A 120/240 V – CO22-U, CO23-U, CO24-U series	39
200 A 120/208 V – CO27 series	41
400 A 120/240 V – CO42 series	43
320 A 240 V – BP320 series	45
400 A 600 V – FA4B-6T series	47
400 A 120/240 V – JS4 series	48
Typical wiring diagrams	51
Accessories	53
Meter covers	62
Service masts	63
Pole line hardware	74
EM series EVEMS solutions	84
Carlon nonmetallic conduits	90
Carlon PV-Mold™	93
EZGround grounding systems	94
EZGround types of connectors	106

CL Series

20 A 600 V; transformer rated

Product specifications

- Conductor range: 14–10 AWG
- Aluminum tunnel type connectors for both load and line sides
- Circuit closing feature to short out current transformer upon removal of meter
- For overhead hub opening only
- Supplied with screw type ring
- Weatherproof Type 3R enclosure

Approved for copper only

CL4-V

Cat. no.	Description	Dimensions (in.) H	W	D	Weight each lb	kg
4 Jaw						
CL4-V	Circuit closing on left side	9¼	7⅝	3 11/16	7	3.1
CL4-TV	Circuit closing on left side, no hub opening					
5 Jaw						
CL5-V	Circuit closing on left side (Lower right hand jaw is a support only)	9¼	7⅝	3 11/16	7	3.1

Diagrams

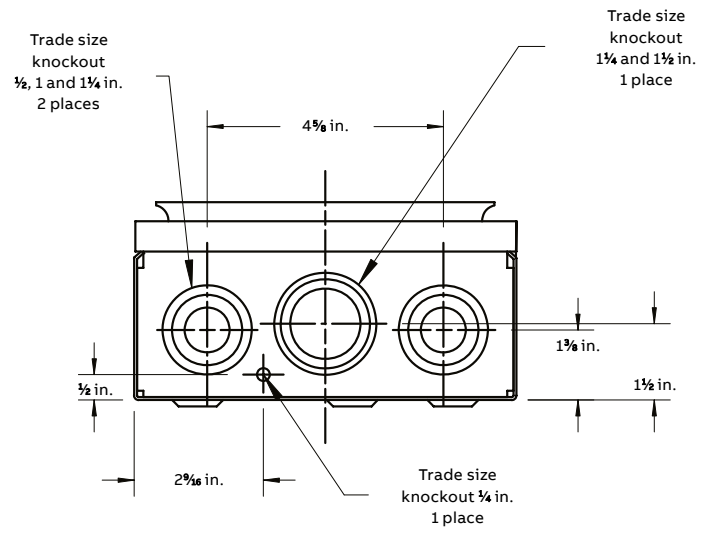

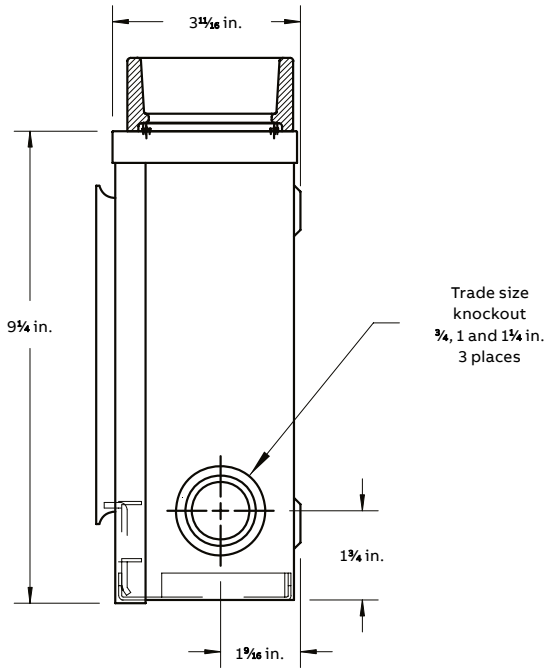

CT Series

20 A 600 V; transformer rated with compartment for test switch

Product specifications

- Conductor range: 14–10 AWG
- Tunnel type connectors for both load and line sides
- For underground service only
- Meter compartment cover overlaps lower test switch compartment cover; insertion of meter securely holds upper cover in place by means of a catch
- Lower test switch compartment cover securely held by upper cover and a catch at bottom
- A removable mounting bridge is provided for fastening test switch
- Supplied with screw type ring

Approved for copper only

CT105

Cat. no.	Description	Dimensions (in.) H	W	D	Weight each lb	kg
4 Jaw						
CT104	Unwired unit with test switch provision	19⅛	12	5⅜	16	7.2
5 Jaw						
CT105	Unwired unit with test switch provision	19⅛	12	5⅜	16	7.2
8 Jaw						
CT108	Unwired unit with test switch provision	19⅛	12	5⅜	18	8.1
13 Jaw						
CT113	Unwired unit with test switch provision	19⅛	12	5⅜	19	8.6

Lower test switch compartment cover securely held by upper cover and a lockout device with an enlarged pad hole (0.375 in. dia.)

Approved for copper only

CT113-L

Cat. no.	Description	Dimensions (in.) H	W	D	Weight each lb	kg
5 Jaw						
CT105-L	BC Hydro approved with SWL cover with enlarged padlock hole	19⅛	12	5⅜	16	7.2
8 Jaw						
CT108-L	BC Hydro approved with SWL cover with enlarged padlock hole	19⅛	12	5⅜	18	8.1
13 Jaw						
CT113-L	BC Hydro approved with SWL cover with enlarged padlock hole	19⅛	12	5⅜	19	8.6

Diagrams

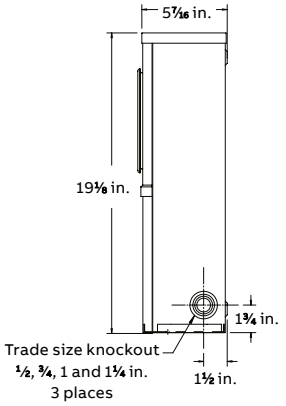

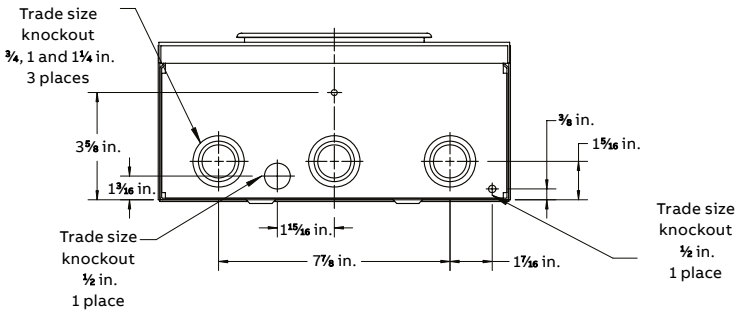

CT-SWL Series

20 A 600 V; transformer rated with test switch

Product specifications

- Conductor range: 14–10 AWG
- Tunnel type connectors for both load and line sides
- For underground service only
- Lower test switch compartment cover securely held by upper cover and a lockout device with an enlarged pad hole (0.375 in. dia.)
- Test switch included as part of these models
- Units are prewired from base to test switch
- Furnished with tamper-resistant device for meter ring
- Weatherproof Type 3R enclosure

Approved for copper only

CT105-SWLHO

Cat. no.	Description	Dimensions (in.) H	W	D	Weight each lb	kg
4 Jaw						
CT104-SWL	Factory prewired unit with lockout device on bottom door	19⅛	11 13/16	5 7/16	18	8.2
CT104-6SWL	Factory prewired unit with lockout device on bottom door (Enmax approved) 5th jaw in 6 o'clock position	19⅛	11 13/16	5 7/16	18	8.2
CT104-5SWLHQ	Hydro-Québec approved 20 A current transformer meter socket	18	8¼	4½	11	5.4
5 Jaw						
CT105-SWLMH	Manitoba Hydro approved 20 A current transformer meter socket	19⅛	11 13/16	5 7/16	21	9.5
CT105-SWLHO	Hydro One approved 20 A current transformermeter socket	18	8⅛	4 3/16	13	6
6 Jaw						
CT106-SWL	Factory prewired unit with lockout device on bottom door	19⅛	11 13/16	5 7/16	21	9.5
CT106-SWLNL	Newfoundland approved 20 A current transformer meter socket	19⅛	11 13/16	5 7/16	21	9.5
8 Jaw						
CT108-SL	Epcor approved 20A current transformer meter socket	19⅛	11 13/16	5 7/16	21	9.5
13 Jaw						
CT113-SWL	Factory prewired unit with lockout device on bottom door	19⅛	12	5⅜	21	9.5
CT113-SWLNL	Newfoudland approved 20 A current transformer meter socket	19⅛	12	5⅜	21	9.5

Diagrams

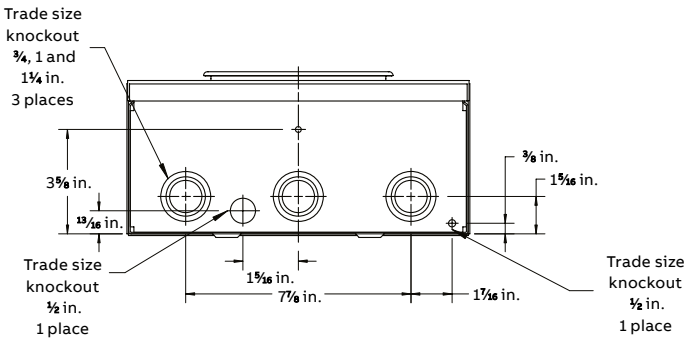

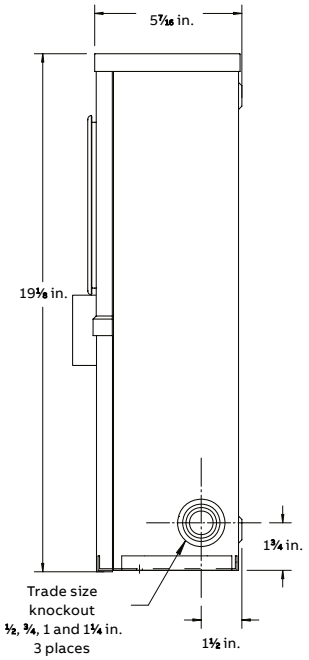

BA3 Series

100 A 600 V; shallow

Product specifications

- Conductor range: 6–2 AWG
  Neutral Conductor Range: 1/0-14 AWG
  Ground Conductor Range: 2-14 AWG
- Aluminum tunnel type connectors for both load and line sides
- For overhead, underground and combination overhead/underground
- Supplied with screw type ring
- Weatherproof Type 3R enclosure

Note: Supply from an underground network often requires use of stud type connector. Consult your local utility.

Approved for copper or aluminum

BA3-VGN

BA3-INV

Cat. no.	Description	Dimensions (in.) H	W	D	Weight each lb	kg
4 Jaw						
BA3-V	Overhead, hub opening	9¼	7 7/16	3 11/16	5	2.2
BA3-INV	Overhead opening comes with insulated neutral	9¼	7 7/16	3 11/16	5	2.2
BA3-1V	Overhead, hub opening, comes with 1 in. hub	9¼	7 7/16	3 11/16	5	2.2
BA3-1 1/4V	Overhead, hub opening, comes with 1¼ in. hub	9¼	7 7/16	3 11/16	5	2.2
BA3-1 1/4INV	Overhead , hub opening comes with 1¼ in. hub and insulated neutral	9¼	7 7/16	3 11/16	5	2.2
BA3-TV	Underground	9¼	7 7/16	3 11/16	5	2.2
BA3-INTV	Underground come with insulated neutral	9¼	7 7/16	3 11/16	5	2.2
BA3-TCV	Combination overhead-underground	9¼	7 7/16	3 11/16	5	2.2
BA3-INTCV	combination overhead-underground come with insulated neutral	9¼	7 7/16	3 11/16	5	2.2
BA33-V	Overhead, twin hub opening	9¼	7 7/16	3 11/16	5	2.2
BA33-INV	Overhead , twin hub opening come with insulated neutral	9¼	7 7/16	3 11/16	5	2.2
BA33-1V	Overhead, twin hub opening comes with 1 in. hubs	9¼	7 7/16	3 11/16	5	2.2
BA33-1 1/4V	Overhead, twin hub opening, comes with 1¼ in. hubs	9¼	7 7/16	3 11/16	5	2.2
BA4-V*	Indoor type, KO on top	9¼	7 7/16	3 11/16	5	2.2
BA4-INV*	Indoor type, KO on top, comes with insulated neutral	9¼	7 7/16	3 11/16	5	2.2
BA4-VGN*	Indoor type, KO on top, comes with ground lug on neutral	9¼	7 7/16	3 11/16	5	2.2
Factory-installed accessories						
Include: -5	5th jaw, standard capacity, 9 o'clock position					

***for indoor use only unit is not NEMA 3R**

Diagrams

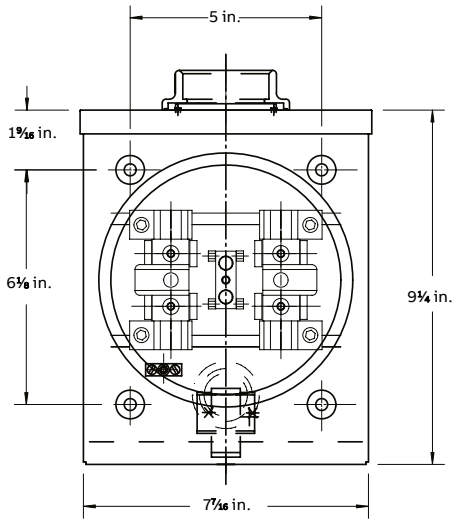

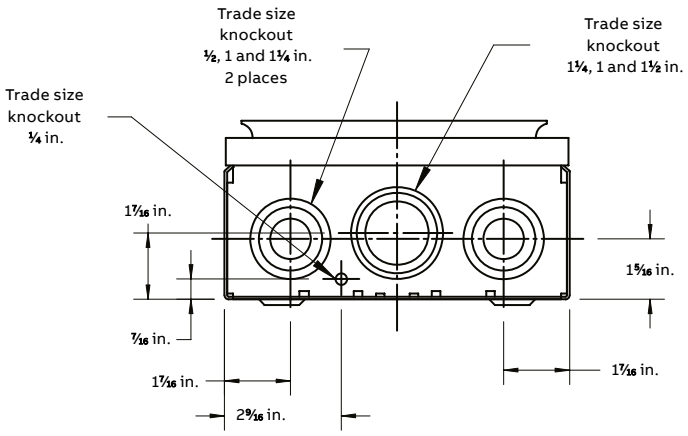

BE1 Series

125 A 600 V; king size

Product specifications

- Conductor range: 6–1/0 AWG
  Neutral Conductor Range: 1/0-14 AWG
  Ground Conductor range: 2-14 AWG
- Aluminum tunnel type connectors for both load and line sides
- For overhead, underground and combination overhead/underground
- Supplied with screw type ring
- Weatherproof Type 3R enclosure

Note: Supply from an underground network often requires use of stud type connector. Consult your local utility.

Approved for copper or aluminum

BE1-TCVGN

BE1-INTCV

Cat. no.	Description	Dimensions (in.) H	W	D	Weight each lb	kg
4 Jaw						
BE1-V	Overhead, hub opening	14⅝	8¼	4⅜	8	3.6
BE1-INV	Overhead, hub opening, comes with insulated neutral	14⅝	8¼	4⅜	8	3.6
BE1-1 1/4V	Overhead, hub opening, comes with 1¼ in. hub	14⅝	8¼	4⅜	8	3.6
BE1-1 1/4INV	Overhead, hub opening comes with 1 ¼” hub and insulated neutral	14⅝	8¼	4⅜	8	3.6
BE1-1 1/4VGN	Overhead, comes with 1 ¼ in. hub and ground lug on neutral	14⅝	8¼	4⅜	8	3.6
BE1-1 1/2V	Overhead, hub opening, comes with 1½ in. hub	14⅝	8¼	4⅜	8	3.6
BE1-TV	Underground	14⅝	8¼	4⅜	8	3.6
BE1-INTV	Underground comes with insulated neutral	14⅝	8¼	4⅜	8	3.6
BE1-TCV	Combination overhead-underground	14⅝	8¼	4⅜	8	3.6
BE1-TCVGN	Combination overhead-underground, comes with ground lug on neutral	14⅝	8¼	4⅜	8	3.6
BE1-TCV-CR	Combination overhead-underground, corrosion resistant	14⅝	8¼	4⅜	8	3.6
BE1-TCVGN-CR	Combination overhead-underground, comes with ground lug on neutral, corrosion resistant	14⅝	8¼	4⅜	8	3.6
BE1-INTCV	Combination overhead-underground comes with insulated neutral	14⅝	8¼	4⅜	8	3.6
BE1-5-TVGN	Combination overhead-underground	14⅝	8¼	4⅜	8	3.6
BE11-V-CM	Overhead, twin hub opening	14⅝	8¼	4⅜	8	3.6
BE11-1 1/4V	Overhead, twin hub opening comes with 1¼ in. hubs	14⅝	8¼	4⅜	8	3.6
BE11-1 1/4INV	Overhead, twin hub opening comes with 1¼ in. hubs and insulated neutral	14⅝	8¼	4⅜	8	3.6
BE11-1-1/4 VGN	Overhead, twin hub opening, comes with 1 ¼ in. hubs and ground lug on neutral	14⅝	8¼	4⅜	8	3.6
Factory-installed accessories						
Include: -5	5th jaw, standard capacity, 9 o’clock position					

Diagrams

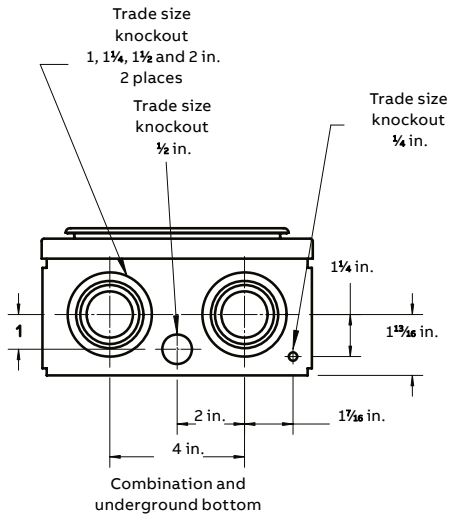

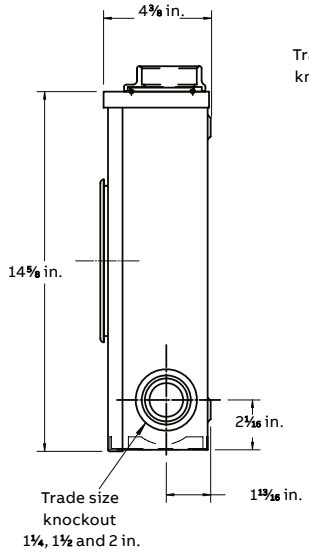

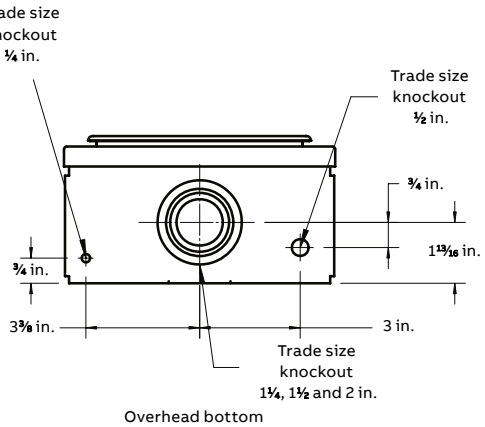

BE2 Series

200 A (main lugs) 600 V; multiple position – 100 A per position

BE2-V

NOTE: Supply from an underground network often requires use of stud type connector. Consult your local utility.

Product specifications

- Conductor range: line: 6 AWG–250 kcmil, load: 6–1/0 AWG
- Aluminum tunnel type connectors for both line and load sides
- Factory prebussed from main lugs to each position
- Combination overhead-underground supplied with hub opening closure plate for underground service
- Hubs to be ordered separately (refer to pages D57–D58)
- Supplied with screw type rings
- Weatherproof Type 3R enclosure

Approved for copper or aluminum

			Dimensions (in.)			Weight each	
Cat. no.		**Meter position**	**H**	**W**	**D**	**lb**	**kg**
4 Jaw							
Left-hand entry	**Right-hand entry**						
BE2-V	BE2-VH	2 position	14⅝	16½	5 3/16	18	8.1
BE3-V	BE3-VH	3 position	14⅝	24 13/16	5 3/16	26	11.8
BE4-V	BE4-VH	4 position	14⅝	33⅛	5 3/16	34	15.4
BE5-V	BE5-VH	5 position	14⅝	41 7/16	5 3/16	42	19.0
BE6-V	BE6-VH	6 position	14⅝	49¾	5 3/16	50	22.7
Factory-installed accessories							
Include:	-5					5th jaw, standard capacity, 9 o'clock position	

Diagrams

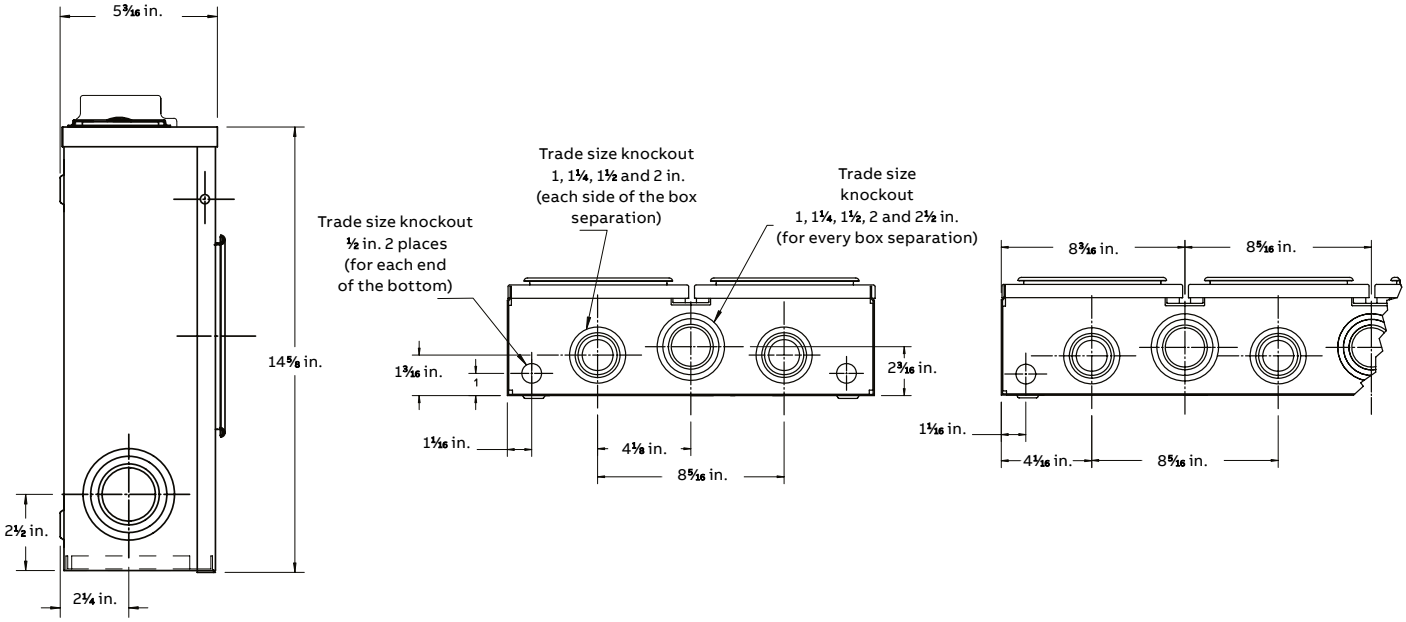

BEC Series

200 A (main lugs) 600 V; multiple position – 125 A per position stud type

BEC2-V

Product specifications

- Conductor range: line: ½ in. studs supplied, load: 6–1/0 AWG
- Aluminum tunnel type connectors load side; stud ½ in. line side
- For underground service only
- Factory prebussed from main lugs to each position
- Supplied with screw type rings
- Weatherproof Type 3R enclosure

Approved for copper or aluminum

			Dimensions (in.)			Weight each	
Cat. no.		**Meter position**	**H**	**W**	**D**	**lb**	**kg**
4 Jaw							
Left-hand entry	**Right-hand entry**						
BEC2-V	BEC2-VH	2 position	15⅛	24³⁄₁₆	5	27	12.2
BEC2-VA*	BEC2-VAH	2 position comes with connector (tunnel type)	15⅛	24³⁄₁₆	5	27	12.2
BEC2-VE*	BEC2-VEH	2 position extended enclosure	20¹⁄₁₆	24³⁄₁₆	5	27	12.2
BEC3-V	BEC3-VH	3 position	15⅛	33⅛	5	35	15.9
BEC3-VA*	BEC3-VAH	3 position comes with connector (tunnel type)	15⅛	33⅛	5	35	15.9
BEC3-VE*	–	3 position extended enclosure	20¹⁄₁₆	33⅛	5	35	15.9
BEC4-V	BEC4-VH	4 position	15⅛	41⁷⁄₁₆	5	43	19.5
BEC4-VA*	BEC4-VAH	4 position comes with connector (tunnel type)	15⅛	41⁷⁄₁₆	5	43	19.5
BEC4-VE*	–	4 position extended enclosure	20¹⁄₁₆	41⁷⁄₁₆	5	43	19.5
Factory installed accessories							
Include:	-5				5th jaw, standard capacity, 9 o'clock position		

* Note: Models with suffix -VA and -VAH = tunnel type connectors on line side provided instead of studs (required by B.C. Hydro). Conductor range: line: 1–1/0 AWG, load: 6–1/0 AWG.

Cross reference

Underground meter required by BC Hydro standard

Not accepted by BC Hydro for underground application	Required by BC Hydro for underground applications
BE2-V	BEC2-VA
BE3-V	BEC3-VA
BE4-V	BEC4-VA
BEC2-VH	BEC2-VAH
BEC3-VH	BEC3-VAH
BEC4-VH	BEC4-VAH
BEC2-V	BEC2-VA
BEC3-V	BEC3-VA
BEC4-V	BEC4-VA
BEC2-VH	BEC2-VAH
BEC3-VH	BEC3-VAH
BEC4-VH	BEC4-VAH

Diagrams

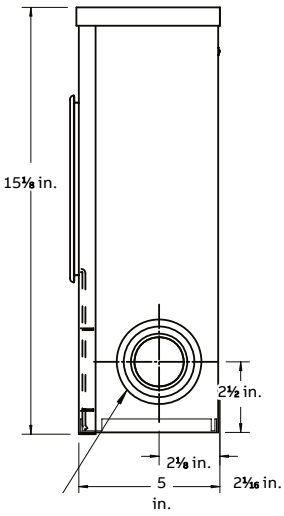

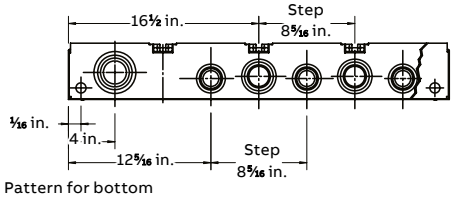

Pattern for bottom

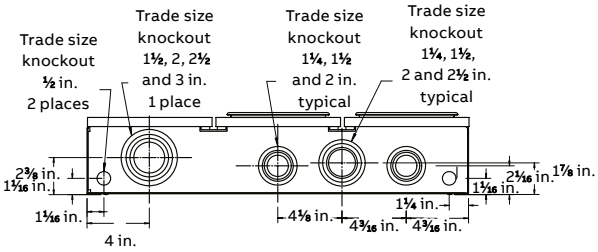

PL17 Series

100 A 600 V; polyphase

Product specifications

- Conductor range: 6–1/0 AWG
- Aluminum tunnel type connectors for both load and line sides
- For overhead, underground and combination overhead/underground
- Supplied with screw type ring
- Weatherproof Type 3R enclosure

Approved for copper or aluminum

PL17-INV

Cat. no.	Description	Dimensions (in.) H	W	D	Weight each lb	kg
7 Jaw						
PL17-INV	Overhead, hub opening	15⅝	8 9/16	5 7/16	12	5.4
PL17-INV-HQ	Overhead, hub opening (Hydro-Québec approved)	15⅝	8 9/16	5 7/16	12	5.4
PL17-INTV-HQ	Underground (Hydro-Québec spec)	15⅝	8 9/16	5 7/16	12	5.4
PL17-INTCV	Combination overhead-underground	15⅝	8 9/16	5 7/16	12	5.4
PL17-INTCV-HQ	Combination overhead-underground (Hydro-Québec approved)	15⅝	8 9/16	5 7/16	12	5.4
PL17-V	Overhead, hub opening	15⅝	8 9/16	5 7/16	12	5.4
PL17-TV	Underground	15⅝	8 9/16	5 7/16	12	5.4
PL17-TCV	Combination overhead-underground	15⅝	8 9/16	5 7/16	12	5.4
Factory-installed accessories						
Include: -IN						Insulated neutral

Diagrams

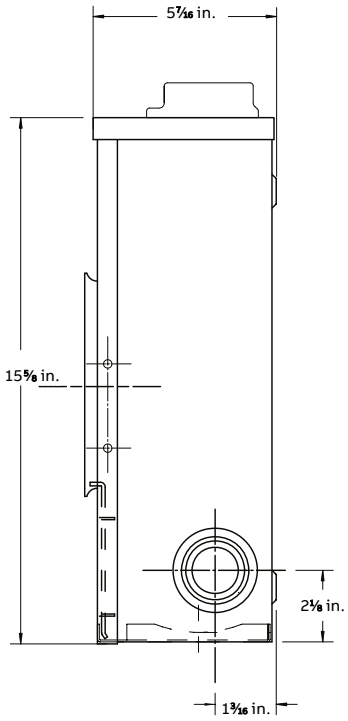

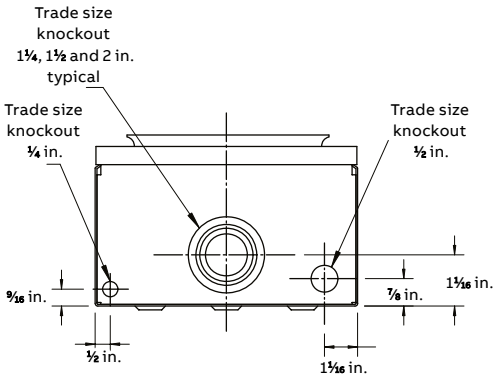

Overhead bottom

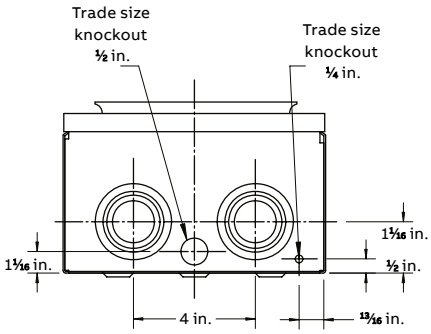

Combination and underground bottom

CO1 Series

100 A 120/240 V; combination with or without breaker

Product specifications

- Conductor range (line and load): 6–1/0 AWG
- Aluminum tunnel type connectors for both load and line sides
- For overhead installation
- For underground installation, gutter option must be ordered (G)
- With factory-installed neutral conductor
- Suitable for 120/240 V single-phase service entrance for residential locations, mobiles homes, trailers, temporary services, recreational parks and other commercial locations
- All units shipped complete with breaker will be supplied with either Siemans type Q (QP) OR GE type THQL (THHQL)
- Bottom compartment has provision for 2 pole circuit breaker (max 100 A) 10 Ka breakers (22 kA breaker where indicated HI) Siemens (QP, QPH), Eaton (BR), GE (TQL). Only SQD (CHOM) breakers will fit units with suffix SD.
- Supplied with screw type rings
- Weatherproof Type 3R enclosure

Approved for copper or aluminum

	Cat. no.	Type	Description	Dimensions (in.) H	W	D	Weight each lb	kg
	4 Jaw							
CO1	CO1	Overhead	Provision for 2 pole 10 kA rated circuit breaker	23½	8¼	4⅜	15	6.8
	CO1-G	Underground	Provision for 2 pole 10 kA rated circuit breaker, complete with gutter	23½	8¼	4⅜	15	6.8
	CO1-5V	Overhead	Provision for 2 pole 10 kA rated circuit breaker, comes with 5th jaw	23½	8¼	4⅜	15	6.8
	CO1-60	Overhead	Comes complete with 2 pole 60 A 10 kA rated circuit breaker	23½	8¼	4⅜	15	6.8
	CO1-60HI	Overhead	Comes complete with 2 pole 60 A 22 kA rated circuit breaker	23½	8¼	4⅜	15	6.8
	CO1-70	Overhead	Comes complete with 2 pole 70 A 10 kA rated circuit breaker	23½	8¼	4⅜	15	6.8
	CO1-100	Overhead	Comes complete with 2 pole 100 A 10 kA rated circuit breaker	23½	8¼	4⅜	15	6.8
	CO1-100G	Underground	Comes complete with 2 pole 100 A 10 kA rated circuit breaker, complete with gutter	23½	8¼	4⅜	15	6.8
	CO1-100HI	Overhead	Comes complete with 2 pole 100 A 22 kA rated circuit breaker	23½	8¼	4⅜	15	6.8
	CO1-100HI-G	Underground	Comes complete with 2 pole 100 A 22 kA rated circuit breaker, complete with gutter	23½	8¼	4⅜	15	6.8
	CO1-SD	Overhead	Provision for Square D type QO 2 pole 10 kA rated circuit breaker	23½	8¼	4⅜	15	6.8
	CO1-SD-G	Underground	Provision for Square D type QO 2 pole 10 kA rated circuit breaker, complete with gutter	23½	8¼	4⅜	15	6.8

Diagrams

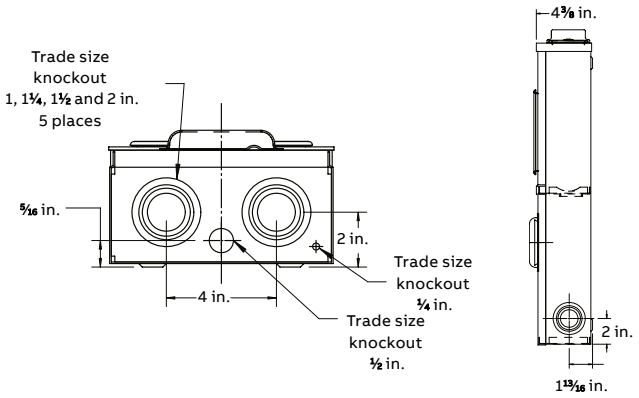

CO1 Multi-gang

200 A (main lugs), 100 A per position 120/240 V; multi-gang combination with or without breaker

CO12-100HI

	Cat. no.	Type	Description	Position	Dimensions (in.) H	W	D	Weight Each lb	kg
	4 Jaw								
	CO12	Overhead	2 Gang, Provision for 2 X 2 pole 10 kA rated circuit breaker	2	23½	16½	4⅜	30	13.60
	CO12-100	Overhead	2 Gang, Comes complete with 2 X 2 pole 100 A 10 kA rated circuit breaker	2	23½	16½	4⅜	30	13.60
	CO12-100-U	Underground	2 Gang with blank compartment, comes complete with 2 x 2 pole 100 A 10 kA rated circuit breaker	2	23½	16½	4⅜	30	13.60
	CO12-100HI	Overhead	2 Gang Comes complete with 2 X 2 pole 100 A 22 kA rated circuit breaker	2	23½	16½	4⅜	30	13.60
	CO12-100HI-U	Underground	2 Gang with blank compartment, comes complete with 2 x 2 pole 100 A 22 kA rated circuit breaker	2	23½	24 13/16	5	30	13.60
	CO12-SD	Overhead	2 Gang, Provision for 2 x Square D type QO 2 pole 10 kA rated circuit breaker	2	23½	24 13/16	5	30	13.60
	CO12-SD-U	Underground	2 Gang with blank compartment, Provision for 2 x Square D type QO 2 pole 10 kA rated circuit breaker	2	23½	24 13/16	5	30	13.60
	CO13	Overhead	3 Gang, Provision for 3 X 2 pole 10 kA rated circuit breaker	3	23½	24¾	4⅜	45	20.41
	CO13-100	Overhead	3 Gang, Comes complete with 3 X 2 pole 100 A 10 kA rated circuit breaker	3	23½	24¾	4⅜	45	20.41
	CO13-100-U	Underground	3 Gang with blank compartment, comes complete with 3 x 2 pole 100 A 10 kA rated circuit breaker	3	23½	24¾	4⅜	45	20.41
	CO13-100HI	Overhead	3 Gang, Comes complete with 3 X 2 pole 100 A 22 kA rated circuit breaker	3	23½	24¾	4⅜	45	20.41
	CO13-100HI-U	Underground	3 Gang with blank compartment, comes complete with 3 x 2 pole 100 A 22 kA rated circuit breaker	3	23½	33⅛	4⅜	45	20.41
	CO13-SD	Overhead	3 Gang, Provision for 3 x Square D type QO 2 pole 10 kA rated circuit breaker	3	23½	33⅛	4⅜	45	20.41
	CO13-SD-U	Underground	3 Gang with blank compartment, Provision for 3 x Square D type QO 2 pole 10 kA rated circuit breaker	3	23½	33⅛	4⅜	45	20.41
	CO14	Overhead	4 Gang, Provision for 4 X 2 pole 10 kA rated circuit breaker	4	23½	33⅛	4⅜	60	27.21
	CO14-100	Overhead	4 Gang, Comes complete with 4 X 2 pole 100 A 10 kA rated circuit breaker	4	23½	33⅛	4⅜	60	27.21
	CO14-100HI	Overhead	4 Gang, Comes complete with 4 X 2 pole 100 A 22 kA rated circuit breaker	4	23½	33⅛	4⅜	60	27.21
	CO14-100HI-U	Underground	4 Gang with blank compartment, comes complete with 4 x 2 pole 100 A 22 kA rated circuit breaker	4	23½	41 7/16	4⅜	60	27.21
	CO14-SD	Overhead	4 Gang, Provision for 4 x Square D type QO 2 pole 10 kA rated circuit breaker	4	23½	41 7/16	4⅜	60	27.21
	CO14-SD-U	Underground	4 Gang with blank compartment, Provision for 4 x Square D type QO 2pole 10 kA rated circuit breaker	4	23½	41 7/16	4⅜	60	27.21

Note: For underground version, add suffix -U.

CO1 Multi-gang

200 A (main lugs), 100 A per position 120/240 V; multi-gang combination with or without breaker

Product specifications

- Overhead only – tunnel type connectors for both load and line sides
- Underground only – aluminum tunnel type connector load side (6–1/0 AWG), line side ½ in. studs
- Supplied with screw type rings
- Weatherproof Type 3R enclosure
- All units shipped complete with breaker will be supplied with either Siemans type Q (QP) OR GE type THQL (THHQL)
- Bottom compartment has provision for 2 pole circuit breaker (max 100 A) 10 kA breakers (22 kA breaker where indicated HI) Siemens (Q), Eaton (BR), GE (TQL). Only SQD (QO) breakers will fit units with suffix SD.

Approved for copper or aluminum

Diagrams

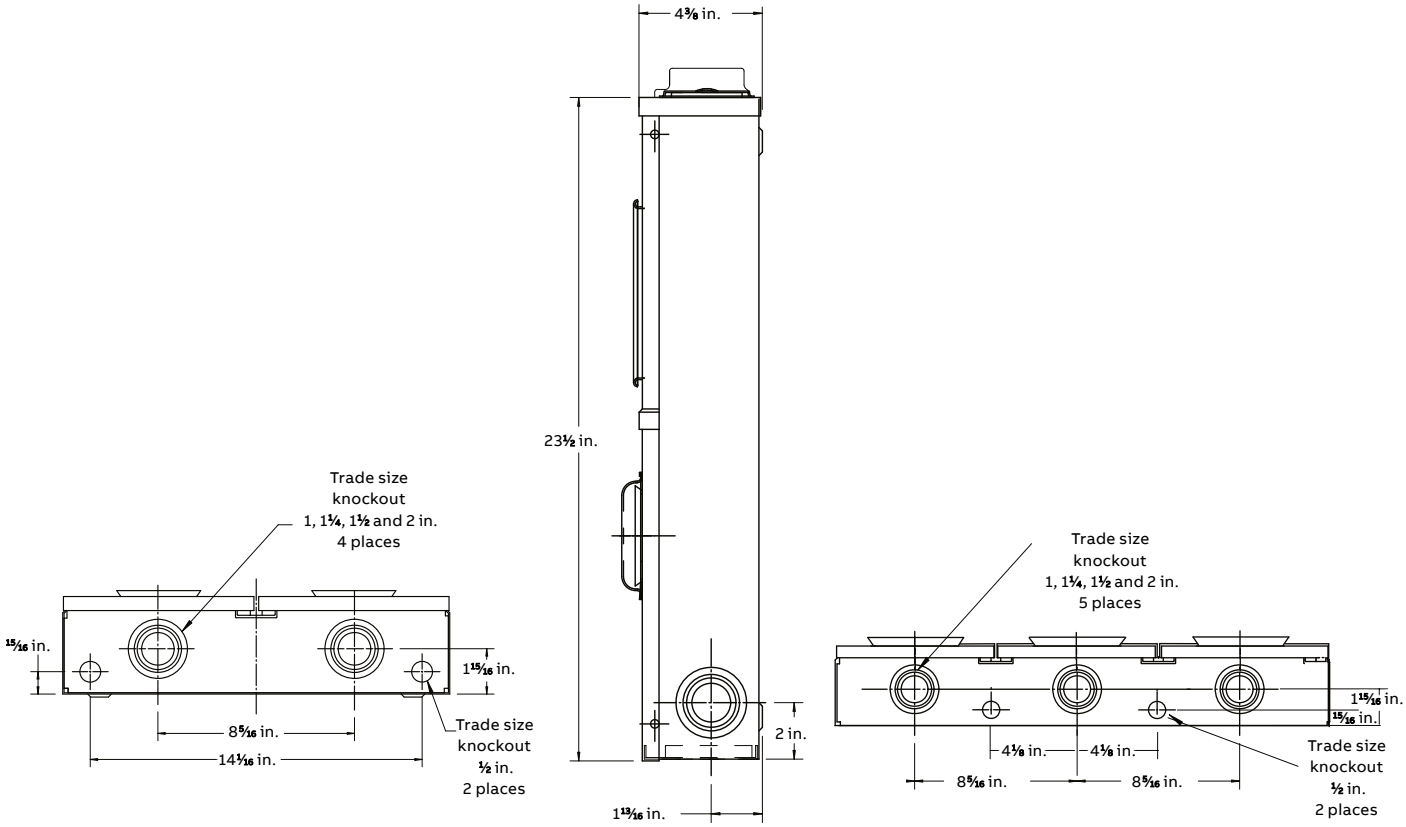

HD1

100 A 120/240 V; flat rate services junction box

Product specifications

- 100 A, 120/240 V single-phase weatherproof junction box for flat rate services fed underground such as telephone booths, plastic signs, bus shelters, etc.
- Aluminum tunnel type connector for line side
- Conductor Range: 6 - 2 AWG
- Bottom compartment has 2 in., 2½ in., 3 in., 3½ in. KOs and ⅜ in. (load side) studs to accommodate compression lugs (supplied by utility)
- Top compartment has provision for ABB, Siemens, G.E., Westinghouse type “Q” 2 pole breaker
- Weatherproof Type 3R enclosure

Approved for copper only

			Dimensions (in.)			Weight each	
	Cat. no.	Type	H	W	D	lb	kg
HD1	HD1	Underground	23½	8⅝	6 5/16	20	9.0

Diagrams

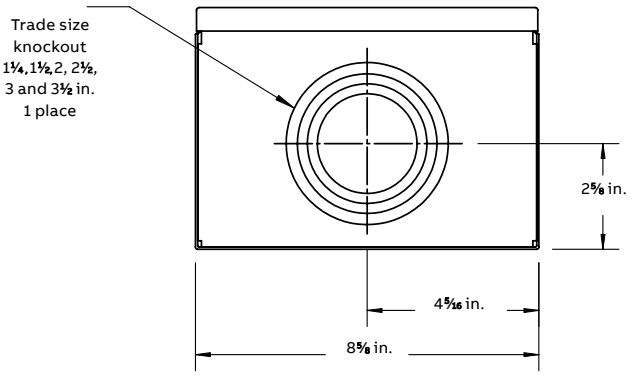

Microlectric

Highly corrosion-resistant meter sockets

For challenging environmental conditions, such as coastal zones, where corrosion can significantly shorten product life expectancy, Microlectric corrosion-resistant meter sockets are the solution.

The CR (Corrosion Resistant) option is now available on three of our best-selling meter sockets: the BQ2, BE1 and BS2 Series. The CR option offers homeowners durability, functionality and peace of mind for years to come with no more prematurely rusted-out enclosures! With the CR option, meter sockets withstand environmental corrosion and enclosure remain rust-free longer.

Corrosion-resistant option on selected Microlectric BQ2, BE1 and BS2 models

- Designed and manufactured in Canada for the Canadian climate – withstands temperature variations from -40°C to 90°C
- Superior resistance to corrosion in all types of environments – ideally suited for coastal and industrial areas
- Suitable for both overhead and underground installations – reduces inventory requirements
- Robust galvanized steel construction
- New elegant and distinctive colour identifies CR option meter sockets

Microlectric

Highly corrosion-resistant meter sockets

Diagrams

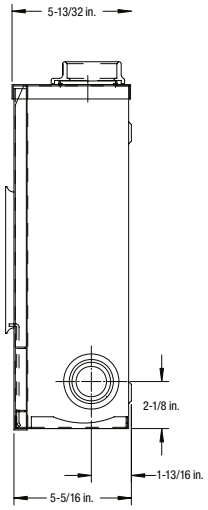

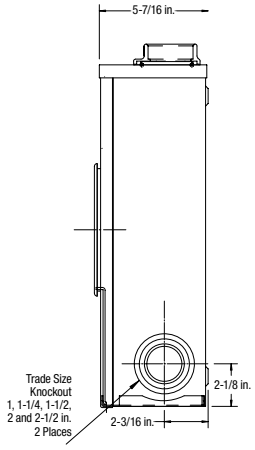

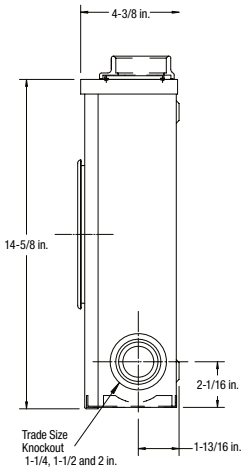

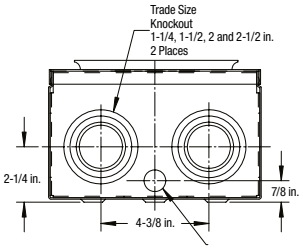

BQ2- TCV

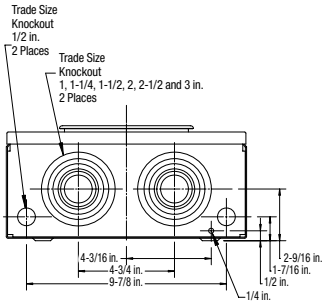

BS2

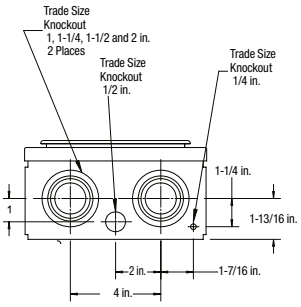

BE1

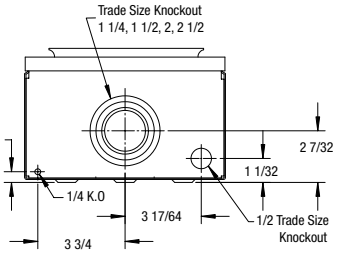

BQ2- V

—

Combination overhead & underground meter sockets with weatherproof type 3RX enclosure

Copper or aluminum

Product description				Dimensions (in.)			Weight
	Factory-installed accessories	Amps/Volts	Conductor range	H	W	D	(lb./ kg)
BE1-TCV-CR	—	100 A 600 V	6-1/0 AWG	14-5/8	8-1/4	4-3/8	8 lb. / 3.6 kg
BE1-TCVGN-CR	Ground on neutral	100 A 600 V	6-1/0 AWG	14-5/8	8-1/4	4-3/8	8 lb. / 3.6 kg
BE1-INTCV-CR	Insulated neutral	100 A 600 V	6-1/0 AWG	14-5/8	8-1/4	4-3/8	8 lb. / 3.6 kg
BQ2-TCV-CR	—	200 A 600 V	6 AWG–250 kcmil	15-5/8	8-47/64	5-13/32	12 lb. / 5.4 kg
BQ2-TCVGN-CR	Ground on neutral	200 A 600 V	6 AWG–250 kcmil	15-5/8	8-47/64	5-13/32	12 lb. / 5.4 kg
BS2-TCVBC-CR	—	200 A 600 V	6 AWG–250 kcmil	17-1/8	12	5-7/16	14 lb. / 6.3 kg
BS2-INTCVBC-CR	Insulated neutral	200 A 600 V	6 AWG–250 kcmil	17-1/8	12	5-7/16	14 lb. / 6.3 kg
BS2-TCVGNBC-CR	Ground on neutral	200 A 600 V	6 AWG–250 kcmil	17-1/8	12	5-7/16	14 lb. / 6.3 kg
BQ2-2V-CR*	Comes with 2 in. hub	200 A 600 V	6 AWG–250 kcmil	15-5/8	8-47/64	5-13/32	12 lb. / 5.4 kg
BQ2-2VGN-CR*	Ground on neutral - Comes with 2 in. hub	200 A 600 V	6 AWG–250 kcmil	15-5/8	8-47/64	5-13/32	12 lb. / 5.4 kg
BQ2-VGN-CR*	Ground on neutral	200 A 600 V	6 AWG–250 kcmil	15-5/8	8-47/64	5-13/32	12 lb. / 5.4 kg

BQ2 Series

200 A 600 V; standard enclosure

Product specifications

- Conductor range: 6 AWG–250 kcmil
- Aluminum tunnel type connectors for both load and line sides
- For overhead, underground and combination overhead/underground
- Supplied with screw type ring
- Weatherproof Type 3R enclosure

Note: Supply from an underground network often requires use of stud type connector. Consult your local utility.

Approved for copper or aluminum

BQ2-TCVGN

BQ2-INTCV

Cat. no	Description	Dimensions (in.) H	W	D	Weight each lb	kg
4 Jaw						
BQ2-V	Overhead, hub opening	15 5/8	8 47/64	5 13/32	12	5.4
BQ2-VGN	Overhead opening comes with ground lug on neutral	15 5/8	8 47/64	5 13/32	12	5.4
BQ2-VGN-CR	Overhead comes with ground lug on neutral, corrosion resistant	15 5/8	8 47/64	5 13/32	12	5.4
BQ2-2V	Overhead, hub opening, comes with 2 in. hub	15 5/8	8 47/64	5 13/32	12	5.4
BQ2-2INV	Overhead, comes with 2 in. hub and insulated neutral	15 5/8	8 47/64	5 13/32	12	5.4
BQ2-2VGN	Overhead , hub opening comes with 1 ½" hub and ground lug on neutral	15 5/8	8 47/64	5 13/32	12	5.4
BQ2-TV	Underground	15 5/8	8 47/64	5 13/32	12	5.4
BQ2-INTV	Underground, comes with insulated neutral	15 5/8	8 47/64	5 13/32	12	5.4
BQ2-TVGN	Underground comes with ground lug on neutral	15 5/8	8 47/64	5 13/32	12	5.4
BQ2-TCV	Combination, overhead-underground	15 5/8	8 47/64	5 13/32	12	5.4
BQ2-TCV-CR	Combination overhead-underground, corrosion resistant	15 5/8	8 47/64	5 13/32	12	5.4
BQ2-TCVGN	Combination overhead-underground comes with ground lug on neutral	15 5/8	8 47/64	5 13/32	12	5.4
BQ2-TCVGN-CR	Combination overhead-underground comes with ground lug on neutral , corrosion resistant	15 5/8	8 47/64	5 13/32	12	5.4
BQ2-22VNH	Overhead, twin hub opening	15 5/8	8 47/64	5 13/32	12	5.4
BQ2-22INVNH	Overhead, twin hub opening, comes with insulated neutral	15 5/8	8 47/64	5 13/32	12	5.4
BQ2-22VNHGN	Overhead , twin hub opening comes with ground lug on neutral	15 5/8	8 47/64	5 13/32	12	5.4
BQ2-2VGN-CR	Overhead comes with ground lug on neutral, corrosion resistant	15 5/8	8 47/64	5 13/32	12	5.4
BQ2-22V	Overhead, twin hub opening, comes with 2 in. hubs	15 5/8	8 47/64	5 13/32	12	5.4
BQ2-22VGN	Overhead, twin hub opening comes with 2 in hubs and ground lug on neutral	15 5/8	8 47/64	5 13/32	12	5.4

Factory-installed accessories

Include: -5 — 5th jaw standard capacity

BQ2 Series

200 A 600 V; standard enclosure

Diagrams

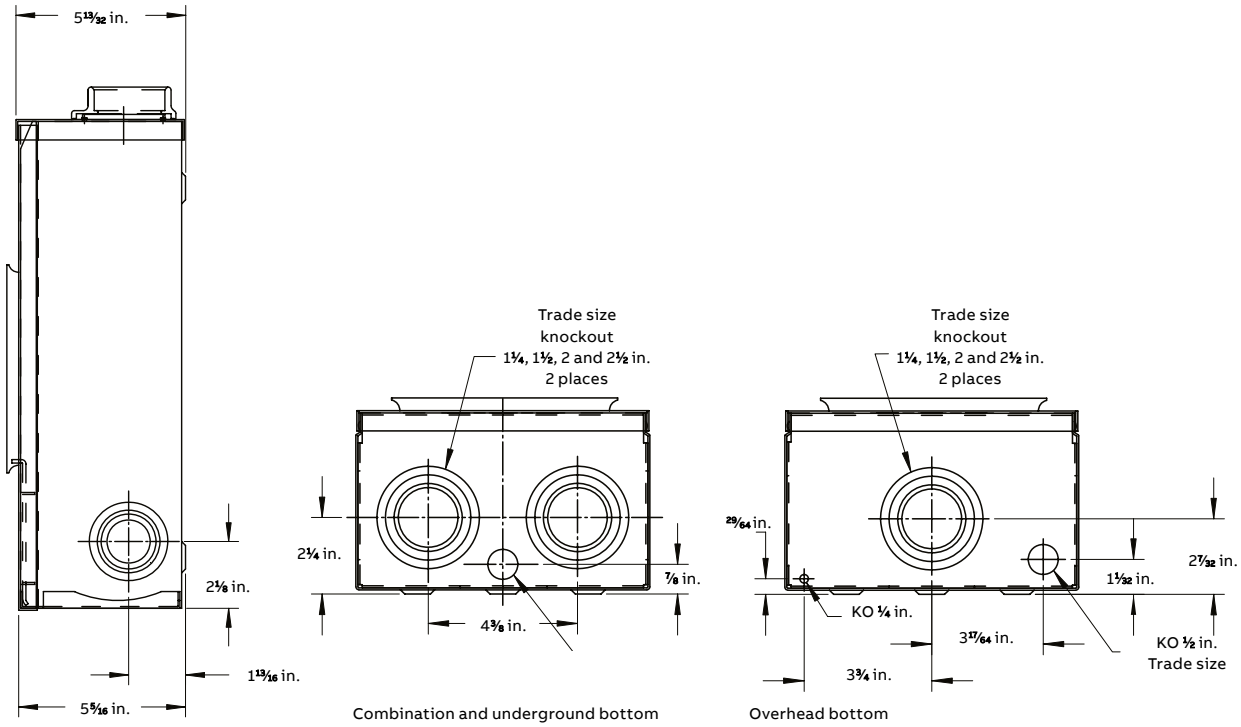

BP2-TV

200 A 240 V; standard enclosure

Product specifications

- Conductor range: 6 AWG–250 kcmil
- Aluminum tunnel type connectors for both load and line sides
- For underground service only
- Supplied with screw type ring
- Weatherproof Type 3R enclosure

Approved for copper or aluminum

			Dimensions (in.)			Weight each	
	Cat. no.	**Description**	**H**	**W**	**D**	**lb**	**kg**
BP2-TV	BP2-TV	Underground	20	12	5 7/16	16.5	7.48

Diagrams

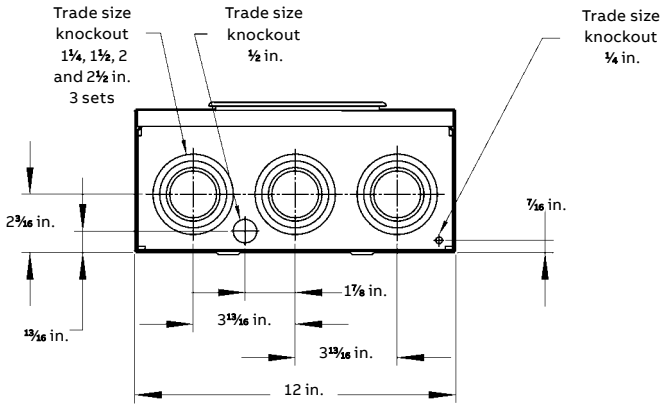

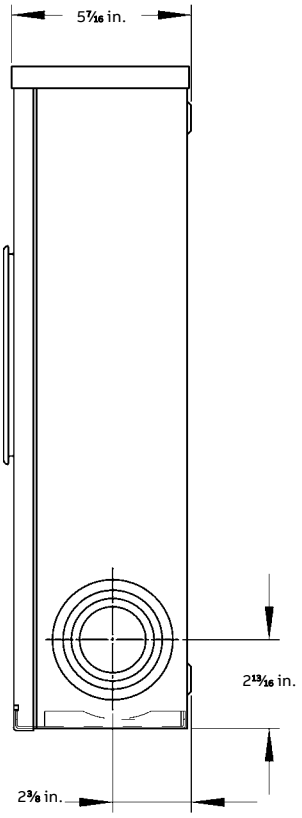

BS2 Series

200 A 600 V; oversize enclosure

Product specifications

- Conductor range: 6 AWG – 250 kcmil
- Aluminum tunnel type connectors for both load and line sides
- For overhead, underground and combination overhead/underground
- Supplied with screw type ring
- Weatherproof Type 3R enclosure

NOTE: Supply from an underground network often requires use of stud type connector. Consult your local utility.

Approved for copper or aluminum

BS2-INTCV

BS2-TCVGN

		Dimensions (in.)			Weight each	
Cat. no.	**Description**	**H**	**W**	**D**	**lb**	**kg**
4 Jaw						
BS2-V	Overhead, hub opening	17⅛	12	5 7/16	14	6.3
BS2-INV	Overhead , hub opening comes with insolated neutral	17⅛	12	5 7/16	14	6.3
BS2-1 1/2 V	Overhead, hub opening, comes with 1½ in. hub	17⅛	12	5 7/16	14	6.3
BS2-1 1/2INV	Overhead, comes with 1½ in. hub and insulated neutral	17⅛	12	5 7/16	14	6.3
BS2-1 1/2VGN	Overhead, comes with 1½ in. hub and ground lug on neutral	17⅛	12	5 7/16	14	6.3
BS2-2V	Overhead, hub opening, comes with 2 in. hub	17⅛	12	5 7/16	14	6.3
BS2-2VGN	Overhead, comes with 2 in. hub and ground lug on neutral	17⅛	12	5 7/16	14	6.3
BS2-TV	Underground	17⅛	12	5 7/16	14	6.3
BS2-INTV	Underground comes with isolated neutral	17⅛	12	5 7/16	14	6.3
BS2-TCV	Combination, overhead-underground	17⅛	12	5 7/16	14	6.3
BS2-INTCV	Combination overhead-underground comes with isolated neutral	17⅛	12	5 7/16	14	6.3
BS2-TCVGN	Combination overhead-underground comes with ground lug on neutral	17⅛	12	5 7/16	14	6.3
BS2-TCVBC	Combination, overhead-underground comes with 3” ko	17⅛	12	5 7/16	14	6.3
BS2-TCVBC-CR	Combination overhead-underground comes with 3” ko	17⅛	12	5 7/16	14	6.3
BS2-INTCVBC	Combination, overhead-underground comes with 3” ko and insulated neutral	17⅛	12	5 7/16	14	6.3
BS2-TCVGNBC	Combination overhead-underground comes with ground lug on neutral	17⅛	12	5 7/16	14	6.3
BS2-22VNH	Overhead, twin hub opening	17⅛	12	5 7/16	14	6.3
BS2-22V	Overhead, twin hub opening, comes with 2 in. hubs	17⅛	12	5 7/16	14	6.3
Factory-installed accessories						
Include: -5	5th jaw, standard capacity, 9 o’clock position					

BS2 Series

200 A 600 V; oversize enclosure

Diagrams

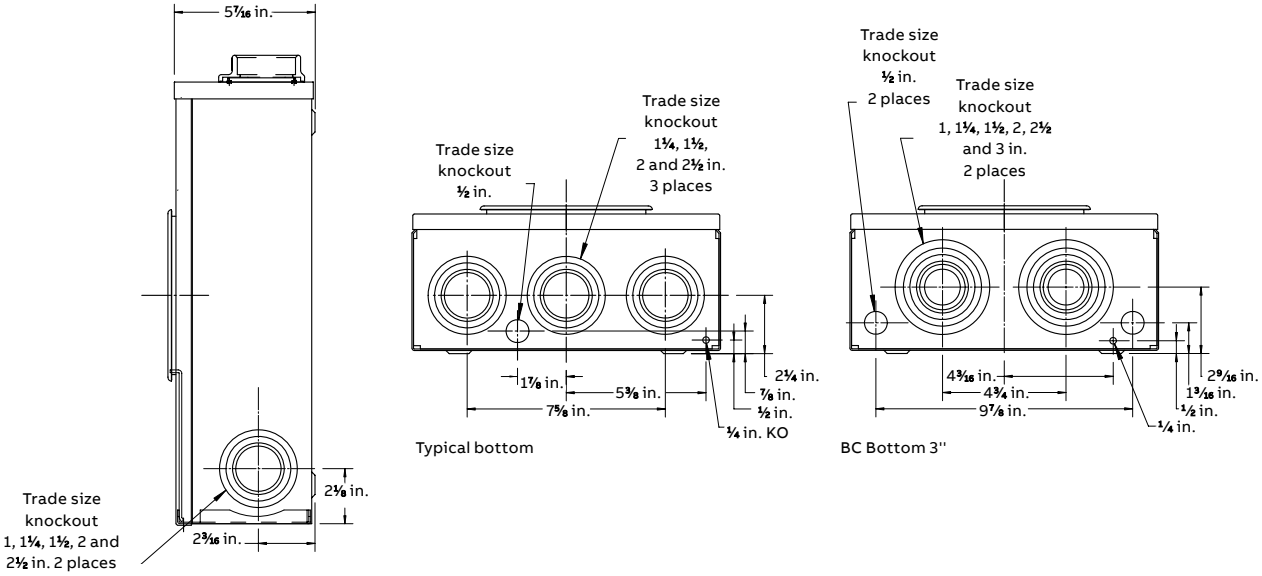

BS2-TCVGNFA

200 A, 120/240 V; single-phase service

Product specifications

- Line Side: 6 - 350 kcmil ,
  Load Side: Dual 6 - 4/0 kcmil
- Tunnel type connectors for both load and line sides
- For underground and above ground service
- Weatherproof Type 3R enclosure
- Designed and manufactured in Canada

Application: When distance is a factor, larger conductors require larger connectors.

Approved for copper or aluminum

BS2-TCVGNFA

	Cat. no.	Description	Dimensions (in.) H	W	D	Weight Each lb	kg
	4 Jaw						
	BS2-TCVGNFA	Combination overhead-underground, comes with ground lug on neutral	27 7/16	12	5 7/16	14	6.3

Diagrams

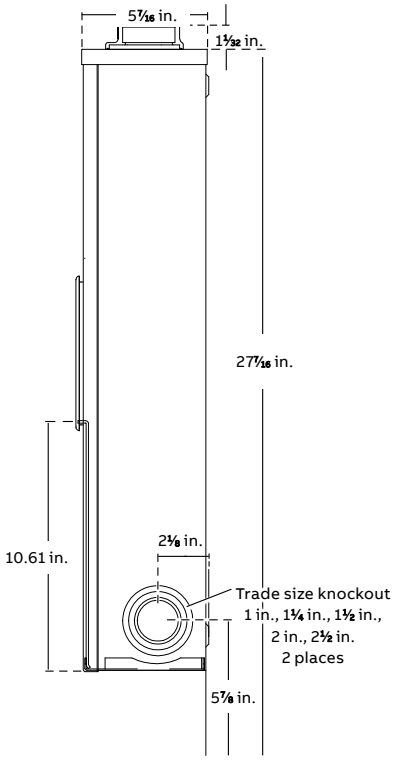

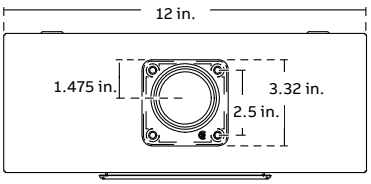

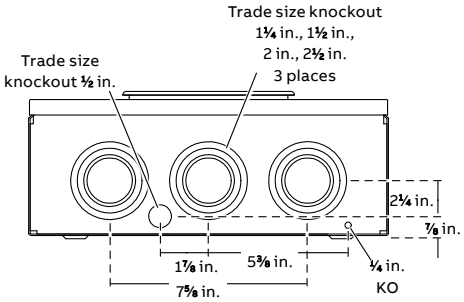

BS2L Series

200 A 600 V; oversize enclosure lay-in lug

Product specifications

- Same as BS2 series with the exception that lay-in type connectors are provided
- Conductor range: 6 AWG–250 kcmil
- Aluminum lay-in type connectors for both load and line sides
- For overhead, underground and combination overhead/underground
- Supplied with screw type ring
- Weatherproof Type 3R enclosure

Approved for copper or aluminum

BS2L-TV

Cat. no.	Description	Dimensions (in.) H	W	D	Weight each lb	kg
4 Jaw						
BS2L-TV	200 A underground with lay-in lugs	17⅛	12	5 7/16	16	7.2
BS2L-INTV	200 A underground with lay in lug, insolated neutral	17⅛	12	5 7/16	16	7.2
BS2L-TCV	200 A over/under combination with lay-in lugs	17⅛	12	5 7/16	16	7.2
BS2L-INTCV	200 A overhead/undergroundwith lay in lugs, isolated neutral	17⅛	12	5 7/16	16	7.2
BS2L-INTCVBC	200 A overhead/underground with lay in lug, isolated neutral c/w 3" KO	17⅛	12	5 7/16	16	7.2
BS2L-TVGN	200 A underground with lay in lugs comes with ground lug on neutral	17⅛	12	5 7/16	16	7.2
BS2L-TCVGN	200 A overhead/underground with lay in lugs comes with ground lug on neutral	17⅛	12	5 7/16	16	7.2
BS2L-TCVGNBC	200 A overhead/underground with lay in lugs comes with ground lug on neutral C/W 3" KO	17⅛	12	5 7/16	16	7.2
Factory-installed accessories						
Include: -5						5th jaw standard capacity

Diagrams

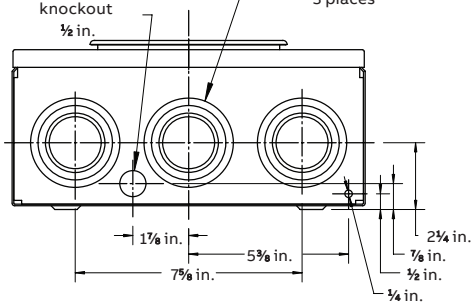

Typical bottom

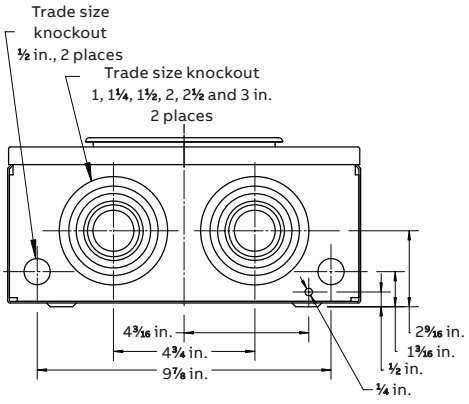

BC HYDRO bottom

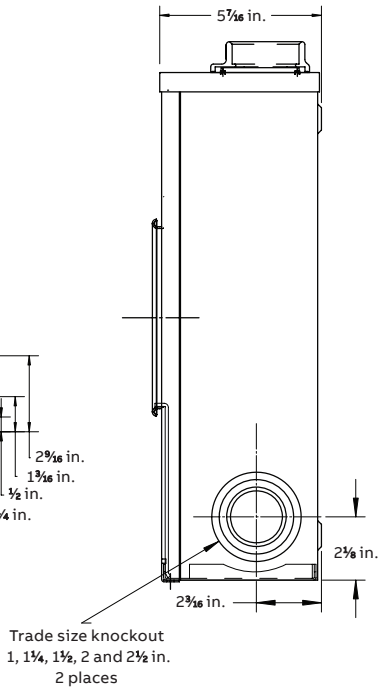

BS2M Series

200 A 600 V; oversize enclosure, subfeed on load side

Product specifications

- Conductor range: line: 6 AWG–250 kcmil, load: 12–1/0 AWG
- Aluminum tunnel type connector for line side
- For overhead service only
- Dual lug subfeed for load side
- Supplied with screw type ring
- Weatherproof Type 3R enclosure

Approved for copper or aluminum

			Dimensions (in.)			Weight each	
	Cat. no.	Description	H	W	D	lb	kg
	4 Jaw						
BS2M-VGN	BS2M-VGN	Overhead, comes with ground lug on neutral	17⅛	12	5 7/16	15	6.8

Diagrams

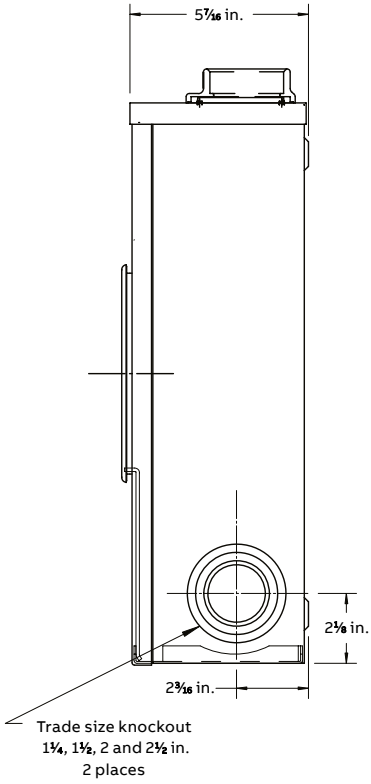

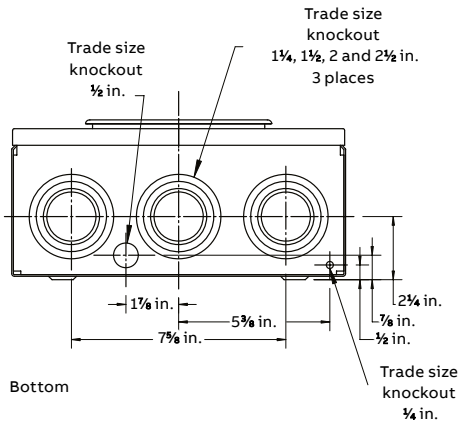

MO2 Series

200 A 600 V; underground only

Product specifications

- Conductor range: line: single ½ in. studs to accommodate compression lugs 350 kcmil max. (supplied by utility), load: 6 AWG–250 kcmil
- For underground service only
- Aluminum tunnel type connectors for load side, ½ in. studs on line side
- Supplied with screw type ring
- Weatherproof Type 3R enclosure

Approved for copper or aluminum

MO2-V

Cat. no.	Description	Dimensions (in.) H	W	D	Weight each lb	kg
4 Jaw						
MO2-V	Underground ½ in. studs	19⅛	12	5 9/16	18	8.1
MO2-INV	Underground ½ in. stud comes with isolated neutral	19⅛	12	5 9/16	18	8.1
MO2-VGN	Underground ½ stud come with ground lug on neutral	19⅛	12	5 9/16	18	8.1
MO2-VO	Underground ½ in. studs for Ontario	19⅛	12	5 9/16	18	8.1
MO2-INVO	Underground ½ in. stud for ontario comes with isolated neutral	19⅛	12	5 9/16	18	8.1
MO2M-INV	Underground ½ stud c/w 2/0 subfeed on load side and isolated neutral	19⅛	12	5 9/16	18	8.1
Factory-installed accessories						
Include: -M					2/0 AWG subfeed on load side	

Diagrams

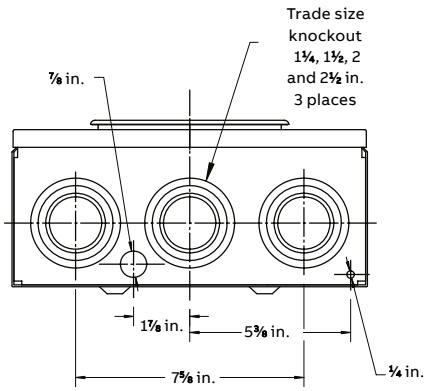

MO2-VO bottom

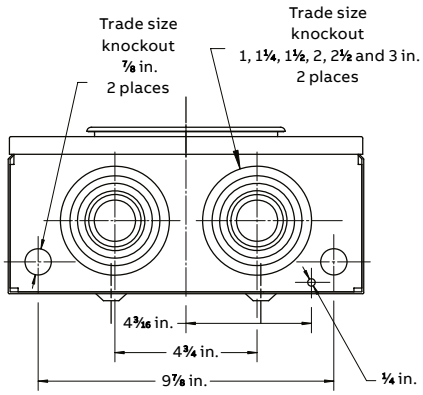

MO2-V bottom

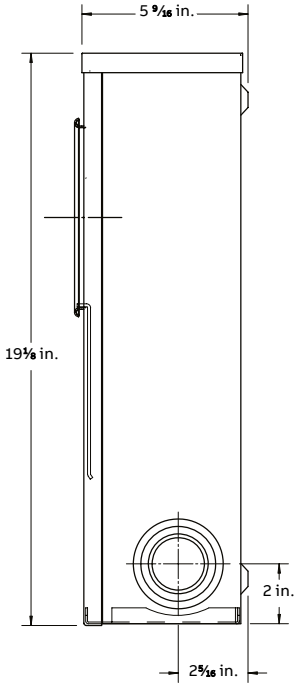

BD2 Series

200 A (main lugs) 600 V; multiple position – 200 A per position

Product specifications

- Conductor range: line: 6 AWG–250 kcmil, load: 6 AWG–250 kcmil
- Aluminum tunnel type connectors for both load and line sides
- Factory prebussed from main lugs to each position
- Supplied with hub opening closure plate for underground service
- Combination overhead underground
- Supplied with screw type rings
- Weatherproof Type 3R enclosure

Approved for copper or aluminum

BD2-V

Cat. no.		Meter position	Dimensions (in.) H	W	D	Weight each lb	kg
4 Jaw							
Left-hand entry	**Right-hand entry**						
BD2-V	BD2-VH	2 position	15 9/16	17 1/2	5 7/16	23	10.4
BD3-V	BD3-VH	3 position	15 9/16	26 1/4	5 7/16	35	15.9
BD4-V	BD4-VH	4 position	15 9/16	35	5 7/16	47	21.3
BD2-VBC	BD2-VBCH	2 position for British Columbia	20 1/16	17 1/2	5 7/16	27	12.2

Diagrams

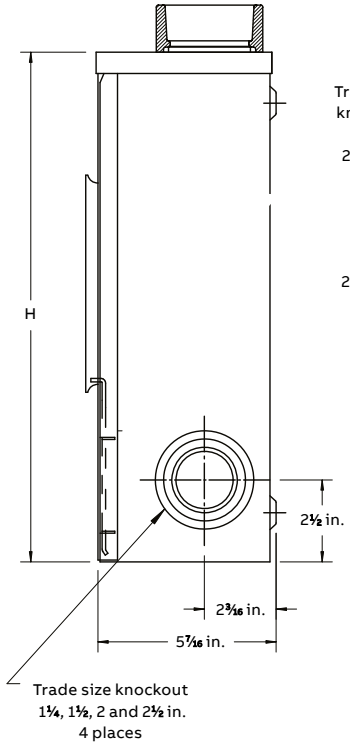

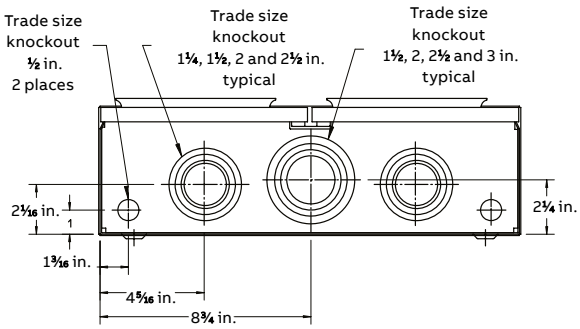

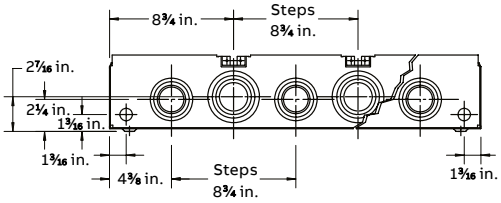

Note: Pattern for bottoms. Left-hand entry is shown. For right-hand entry, unit is manufactured symmetrically with hub openings, knockout and line connections on right side.

BDA2-V Series

200 A (main lugs) 600 V; multiple position with blank compartment 200 A per position

Product specifications

- Conductor range: line: 1 x 6 AWG-250 kcmil, load: 6 AWG–250 kcmil
- Aluminum tunnel type connectors for load side
- Combination overhead and underground
- Hub opening closure plate for underground service
- Supplied with screw type rings
- Weatherproof Type 3R enclosure

Approved for copper or aluminum

BDA2-V

Cat. no.		Meter position	Dimensions (in.) H	W	D	Weight each lb	kg
4 Jaw							
Left-hand entry	**Right-hand entry**						
BDA2-V	BDA2-VH	2 position	15⅝	26³⁄₁₆	5¼	31	14.6

Diagrams

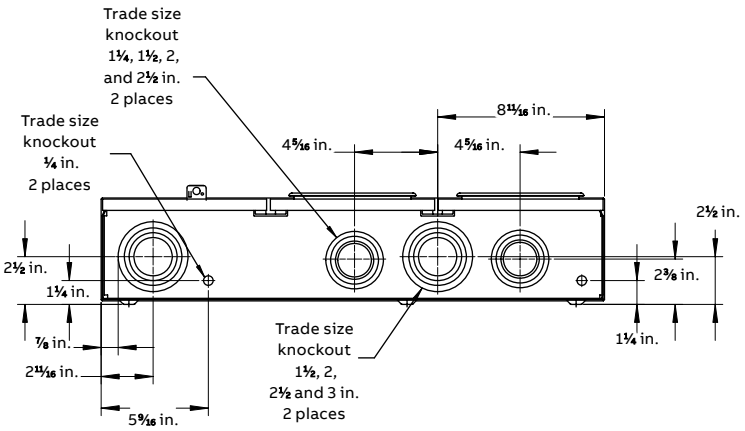

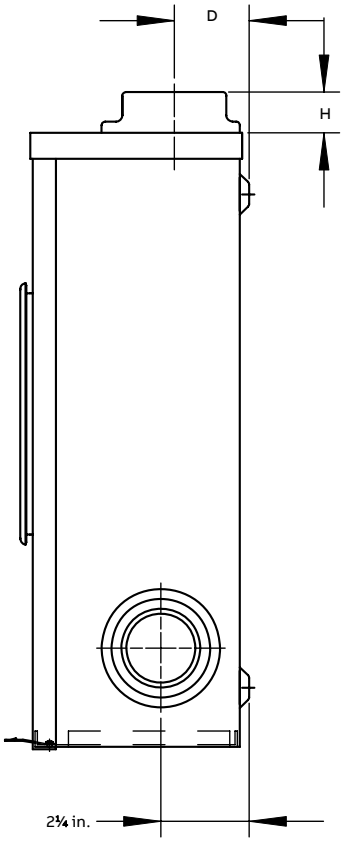

BDC Series

200 A (main lugs) 600 V; stud type multiple position with blank compartment 200 A per position

BDC2-V

Product specifications

- Conductor range: line: single ½ in. studs to accommodate compression lugs (supplied by utility), load: 6 AWG–250 kcmil
- Aluminum tunnel type connectors for load sides
- For underground service only
- Factory prebussed from main lugs to each position
- Supplied with screw type sealing rings
- Weatherproof Type 3R enclosure

For use in all provinces

Copper or aluminum

Cat. no.			Dimensions (in.)			Weight each	
Left-hand entry	Right-hand entry	Meter position	H	W	D	lb	kg
4 Jaw							
BDC2-V	BDC2-VH	2 position	15⅝	26¼	5¼	30	13.6
BDC3-V	BDC3-VH	3 position	15⅝	35	5¼	42	19.0
BDC4-V	BDC4-VH	4 position	15⅝	43¾	5¼	54	24.5

Locking system outside meter section.

For use in Quebec

Copper or aluminum

Cat. no.			Dimensions (in.)			Weight each	
Left-hand entry	Right-hand entry	Meter position	H	W	D	lb	kg
4 Jaw							
BDC2-VIL	BDC2-VHIL	2 position	15⅝	26¼	5¼	30	13.6
BDC3-VIL	BDC3-VHIL	3 position	15⅝	35	5¼	42	19.0
BDC4-VIL	BDC4-VHIL	4 position	15⅝	43¾	5¼	54	24.5

Locking system inside meter section.

For use in British Columbia

Copper or aluminum

Cat. no.			Dimensions (in.)			Weight each	
Left-hand entry	Right-hand entry	Meter position	H	W	D	lb	kg
4 Jaw							
BDC2-VAILBC	BDC2-VAHILBC	2 position	20¾	26¼	5¼	30	13.6
BDC3-VAILBC	BDC3-VAHILBC	3 position	20¾	35	5¼	42	13.6
BDC4-VAILBC	BDC4-VAHILBC	4 position	20¾	43¾	5¼	54	19.0

Locking system inside meter section, comes with tunnel type connector on line side.

For use in Ontario

Copper or aluminum

Cat. no.		Dimensions (in.)			Weight each	
Left-Hand Entry	Meter Position	H	W	D	lb	kg
5 Jaw						
BDC2-5V	2 position	15⅝	26¼	5 7/16	30	13.6
BDC3-5V	3 position	15⅝	35	5 7/16	42	19.0
BDC4-5V	4 position	15⅝	43¾	5 7/16	54	24.5

Locking system outside meter section.

Diagrams

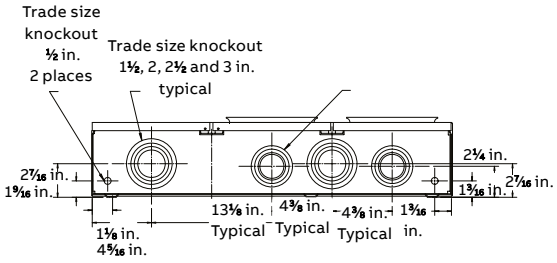

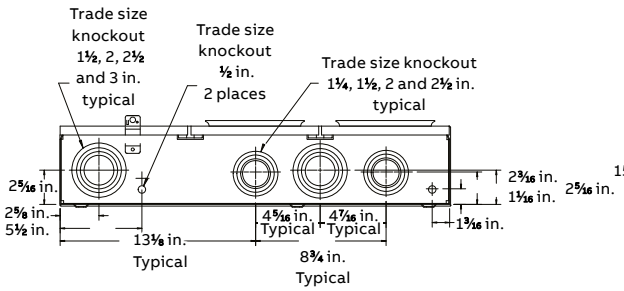

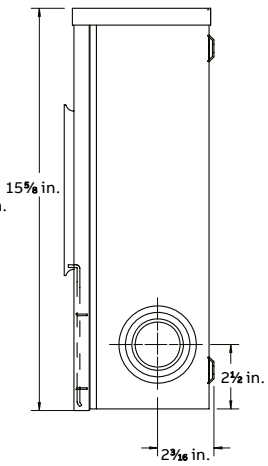

Note: Pattern for bottoms. Left-hand entry is shown.
For right-hand entry, unit is manufactured symmetrically with hub openings, knockouts for line connectors on right side.

BS4 Series

400 A (main lugs) 600 V; multiple position with blank compartment 200 A per position

Product specifications

- Conductor range: line: dual rated connectors for 1 x 4 AWG–600 kcmil or 2 x 1/0 AWG–250 kcmil, load: 6 AWG–250 kcmil
- Aluminum tunnel type connectors for both load and line sides
- Factory prebussed from main lugs to each position
- Combination overhead-underground
- Supplied with hub opening closure plate for underground service
- Larger hub opening requires use of 3 in., 3½ in. or 4 in. hubs unless BS052 adapter plate is used
- Supplied with screw type rings
- Weatherproof Type 3R enclosure

Approved for copper or aluminum

BS42-V

Cat. no.		Meter position	Dimensions (in.) H	W	D	Weight each lb	kg
4 Jaw							
Left-hand entry	**Right-hand entry**						
BS42-V	BS42-VH	2 position	23⅜	26¼	5 5/16	45	20.4
BS43-V	BS43-VH	3 position	23⅜	35	5 5/16	59	26.8
BS44-V	BS44-VH	4 position	23⅜	43¾	5 5/16	73	33.1
BS45-V	BS45-VH	5 position	23⅜	52½	5 5/16	87	39.5
BS46-V	BS46-VH	6 position	23⅜	61¼	5 5/16	101	45.9

Diagrams

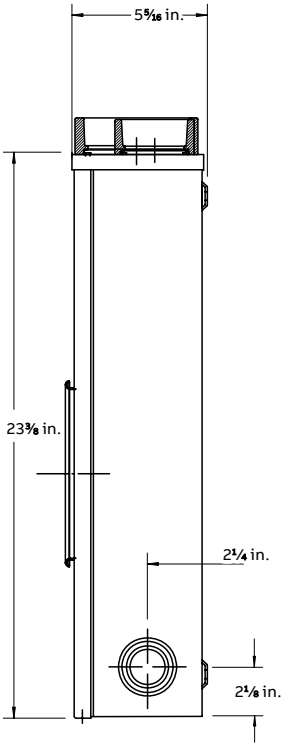

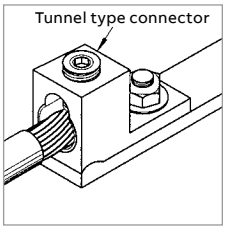

Tunnel type connector termination load and line

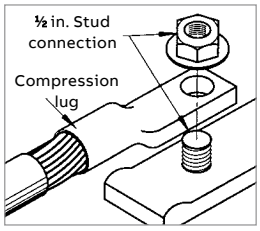

Compression lug termination (with stud connection) 500 kcmil max. Underground application compression connector supplied by utility.

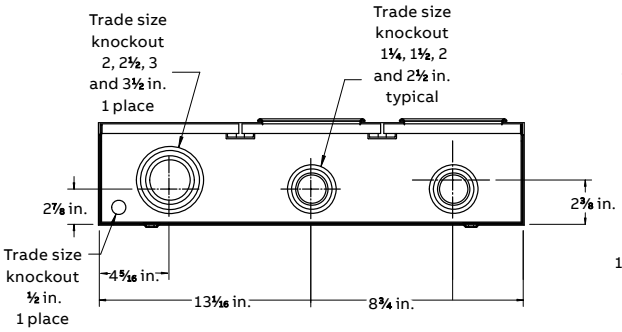

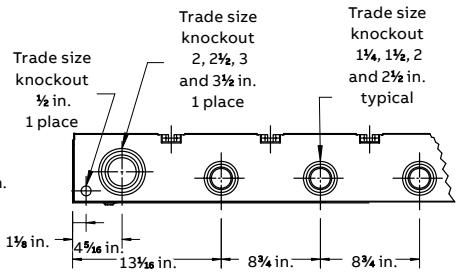

BSC4-G Series

400 A (main lugs) 600 V; stud type multiple position with blank compartment
200 A per position

BSC43-VG

Product specifications

- Aluminum tunnel type connectors for load side: 6 AWG–250 kcmil
- Twin wiring compartment, increased length of the busbars and double 1/2 in. studs to accommodate compression lugs
- Supplied with screw type rings
- Weatherproof Type 3R enclosure

For underground service only

Approved for copper or aluminum

Cat. no.			Dimensions (in.)			Weight each	
Left-hand entry	Right-hand entry	Meter position	H	W	D	lb	kg
BSC42-VG	BSC42-VGH	2 position	23⅜	35	5 5/16	58	26.3
BSC43-VG	BSC43-VGH	3 position	23⅜	43¾	5 5/16	72	32.7
BSC44-VG	BSC44-VGH	4 position	23⅜	52½	5 5/16	86	39.0
BSC45-VG	BSC45-VGH	5 position	23⅜	61¼	5 5/16	100	45.4
BSC46-VG	BSC46-VGH	6 position	23⅜	70	5 5/16	114	51.8

Note: Line side terminations: single 1/2 in. studs to accommodate compression lugs.

For overhead and underground service

Approved for copper or aluminum

Cat. no.			Dimensions (in.)			Weight each	
Left-hand entry	Right-hand entry	Meter position	H	W	D	lb	kg
BSC42-VGA	BSC42-VGAH	2 position	23⅜	35	5 5/16	58	26.3
BSC43-VGA	BSC43-VGAH	3 position	23⅜	43¾	5 5/16	72	32.7
BSC44-VGA	BSC44-VGAH	4 position	23⅜	52½	5 5/16	86	39.0
BSC45-VGA	BSC45-VGAH	5 position	23⅜	61¼	5 5/16	100	45.4
BSC46-VGA	BSC46-VGAH	6 position	23⅜	70	5 5/16	114	51.8

Note: Line side terminations: tunnel type connectors, dual rated for 1 x 1/0-600 kcmil or 2 x 1/0-250 kcmil . For underground connections, single 1/2 in. studs to accommodate compression lugs.

Diagrams

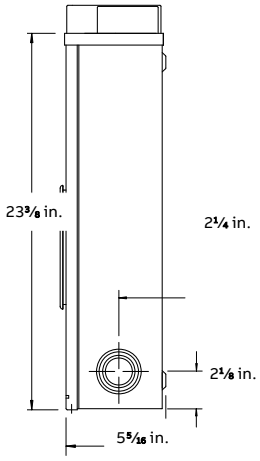

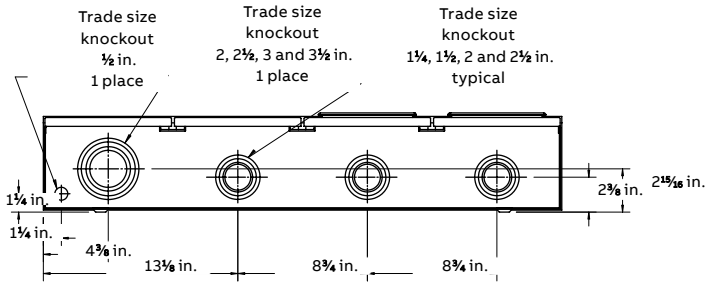

PL27 Series

200 A 600 V; polyphase

Product specifications

- Conductor range: 6 AWG–250 kcmil
- Tunnel type connector for both load and line sides
- For overhead and combination overhead/ underground service
- Larger hub opening requires use of 3 in., 3½ in. or 4 in. hubs unless BS052 adapter plate is used
- Supplied with screw type ring
- Weatherproof Type 3R enclosure

Approved for copper or aluminum

PL27-INTCV

Cat. no.	Description	Dimensions (in.) H	W	D	Weight each lb	kg
7 Jaw						
PL27-V	Overhead hub opening	20⅛	12	5 7/16	18	8.1
PL27-TCV	Combination overhead-underground	20⅛	12	5 7/16	18	8.1
PL27-INV	Overhead hub opening, insulated neutral	20⅛	12	5 7/16	18	8.1
PL27-INTCV	Combination overhead-underground, insulated neutral	20⅛	12	5 7/16	18	8.1

Diagrams

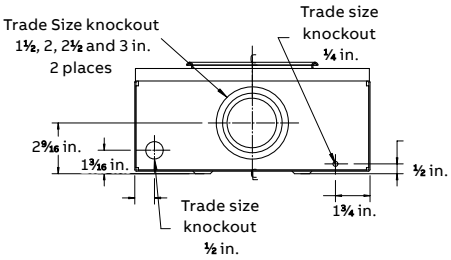

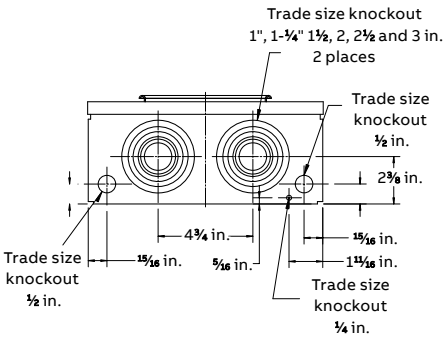

CO2 Series

200 A 120/240 V; combination with or without breaker

Product specifications

- Conductor range (line and load): 6 AWG- 250KCMIL
- Aluminum tunnel type connectors for both load and line sides
- For overhead, underground or combination overhead/underground services
- With factory-installed neutral conductor
- Bottom compartment has provision for 2 pole circuit breaker (max 200 A) 10 kA breakers (22 kA breaker where indicated HI)
- Suitable for 120/240 V single-phase service entrance
- Factory installed adjustable bracket for field installation of Siemens type QJ(L), QJH(L), QR(L) and QRH(L), SQD type QBL, Eaton type ED
- Factory installed 2 pole circuit breaker, 10 kA up to 22 kA interrupting capacity an ABB or Siemens
- Supplied with screw type rings
- Weatherproof Type 3R enclosure

Approved for copper or aluminum

	Cat. no.	Type	Description	Dimensions (in.) H	W	D	Weight each lb	kg
	4 Jaw							
CO2-200	CO2	Overhead	Provision for 1 X 2 pole 10 kA rated circuit breaker	32¾	11 13/16	5 7/16	28	12.7
	CO2-125	Overhead	Comes complete with ABB type A2A 2 pole 125 A 10 kA rated circuit breaker	32¾	11 13/16	5 7/16	30	13.6
	CO2-125-5V	Overhead	Comes complete with ABB type A2A 2 pole 125 A 10 kA rated circuit breaker, complete with 5th jaw	32¾	11 13/16	5 7/16	30	13.6
	CO2-125HI	Overhead	Comes complete with ABB type A2N 2 pole 125 A 22 kA rated circuit breaker	32¾	11 13/16	5 7/16	30	13.6
	CO2-150	Overhead	Comes complete with ABB type A2A 2 pole 150 A 10 kA rated circuit breaker	32¾	11 13/16	5 7/16	30	13.6
	CO2-150-5V	Overhead	Comes complete with ABB type A2A 2 pole 150 A 10 kA rated circuit breaker, complete with 5th jaw	32¾	11 13/16	5 7/16	30	13.6
	CO2-150HI	Overhead	Comes complete with ABB type A2N 2 pole 150 A 22 kA rated circuit breaker	32¾	11 13/16	5 7/16	30	13.6
	CO2-200	Overhead	Comes complete with ABB type A2A 2 pole 200 A 10 kA rated circuit breaker	32¾	11 13/16	5 7/16	30	13.6
	CO2-200-5V	Overhead	Comes complete with ABB type A2A 2 pole 200 A 10 kA rated circuit breaker, complete with 5th jaw	32¾	11 13/16	5 7/16	30	13.6
	CO2-200HI	Overhead	Comes complete with ABB type A2N 2 pole 200 A 22 kA rated circuit breaker	32¾	11 13/16	5 7/16	30	13.6
	CO2-G	Overhead/ Underground	Provision for 2 pole 200 A 10 kA rated circuit breaker	32¾	11 13/16	5 7/16	28	12.7
	CO2-HI-G	Overhead/ Underground	Provision for 2 pole 200 A 22 kA rated circuit breaker	32¾	11 13/16	5 7/16	28	12.7
	CO2-100G	Overhead/ Underground	Comes complete with ABB type A1A 2 pole 100 A 10 kA rated circuit breaker	32¾	11 13/16	5 7/16	30	13.6
	CO2-100HI-G	Overhead/ Underground	Comes complete with ABB type A1N 2 pole 100 A 22 kA rated circuit breaker	32¾	11 13/16	5 7/16	30	13.6
	CO2-125G	Overhead/ Underground	Comes complete with ABB type A2A 2 pole 125 A 10 kA rated circuit breaker	32¾	11 13/16	5 7/16	30	13.6
	CO2-125HI-G	Overhead/ Underground	Comes complete with ABB type A2N 2 pole 125 A 22 kA rated circuit breaker	32¾	11 13/16	5 7/16	30	13.6
	CO2-150G	Overhead/ Underground	Comes complete with ABB type A2A 2 pole 150 A 10 kA rated circuit breaker	32¾	11 13/16	5 7/16	30	13.6
	CO2-150HI-G	Overhead/ Underground	Comes complete with ABB type A2N 2 pole 150 A 22 kA rated circuit breaker	32¾	11 13/16	5 7/16	30	13.6
	CO2-200G	Overhead/ Underground	Comes complete with ABB type A2A 2 pole 200 A 10 kA rated circuit breaker	32¾	11 13/16	5 7/16	32.6	13.6
	CO2-200HI-G	Overhead/ Underground	Comes complete with ABB type A2N 2 pole 200 A 22 kA rated circuit breaker	32¾	11 13/16	5 7/16	30	13.6

CO2 Series

200 A 120/240 V; combination with or without breaker

For underground service only

- "G" : All units come with gutter
- "GBC" : Conductor range (line and load): 6 AWG- 250KCMIL
- "UG" : Line side conductor range: 1/2" studs to accomodate 350 kcmil compression lugs (max.) Approved for 10KA ABB SACE A1A/A2A or 25KA ABB SACE A1N/A2N 2

Approved for copper or aluminum

CO2-200UG

Cat. no.	Type	Description	Dimensions (in.) H	W	D	Weight each lb	kg
4 Jaw							
CO2-125UG	Underground	Comes complete with 2 pole 125 A 10 kA rated circuit breaker and studs on the line side	36 5/32	12	5 17/32	34	15.4
CO2-125HI-GBC	Underground	Comes complete with ABB type A2N 2 pole 125 A 22 kA rated circuit breaker	32 3/4	11 13/16	5 7/16	30	13.6
CO2-125HI-UG	Underground	Comes complete with 2 pole 125 A 22 kA rated circuit breaker and studs on the line side	36 5/32	12	5 17/32	34	15.4
CO2-150UG	Underground	Comes complete with 2 pole 150 A 10 kA rated circuit breaker and studs on the line side	36 5/32	12	5 17/32	34	15.4
CO2-150HI-UG	Underground	Comes complete with 2 pole 150 A 22 kA rated circuit breaker and studs on the line side	36 5/32	12	5 17/32	34	15.4
CO2-200UG	Underground	Comes complete with 2 pole 200 A 10 kA rated circuit breaker and studs on the line side	36 5/32	12	5 17/32	34	15.4
CO2-200HI-GBC	Underground	Comes complete with ABB type A2N 2 pole 200 A 22 kA rated circuit breaker	32 3/4	11 13/16	5 7/16	30	13.6
CO2-200HI-UG	Underground	Comes complete with 2 pole 200 A 22 kA rated circuit breaker and studs on the line side	36 5/32	12	5 17/32	34	15.4

Diagrams

CO2 Series
Overhead

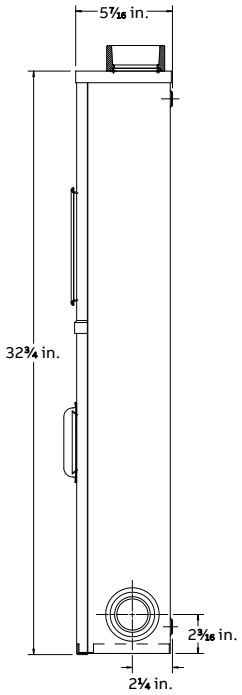

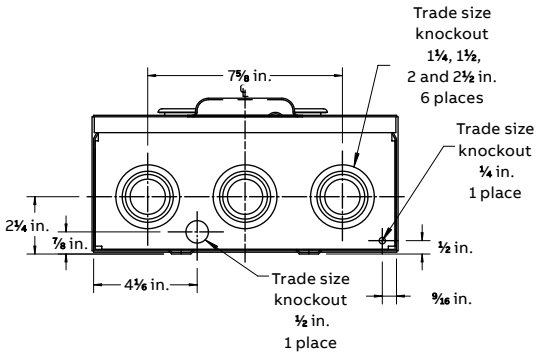

CO2M Series

200 A – Single-phase 120/240 V; combination with or without breaker and splitter

Product specifications

- Conductor range CO2M, CO2MS,CO2MS-2446, CO2MSU (line and load): 6 AWG–250 kcmil
- Conductor range CO2MSB-200, (line side and load neutral): 6 AWG-250 kcmil, (load side and neutral load): 6 AWG-300 kcmil
- For combination overhead/underground service only
- Cutler Hammer (Eaton) breaker to be field-installed
- With CO2FB braid connector (also available for field installation, cat. no. CO2FB-KIT) supplied with Siemens or ABB breaker

Approved for copper or aluminum

C02MS

Cat. no.	Type	Description	Dimensions (in.) H	W	D	Weight each lb	kg
4 Jaw							
CO2MS	Combination overhead/ underground	Provision for field-installed Cutler Hammer (ED) 200 A 2 pole 10 kA rated circuit breaker, provision for pole mounting (splitter included)	39 3/8	12	5 7/16	42	19
CO2MS-2446	Combination overhead/ underground	Provision for field-installed Cutler Hammer (ED) 200 A 2 pole 10 kA rated circuit breaker, provision for pole mounting, comes with 2446 connector (splitter included), Fortis Alberta approved	39 3/8	12	5 7/16	44	19.5
CO2MSB-200	Combination overhead/ underground	Comes complete with ABB type A2A 2 pole 200 A 10 kA rated circuit breaker, comes with neutral bar (splitter included)	40 3/8	12	5 7/16	47	21.3
CO2MSU	Underground	Provision for field-installed Cutler Hammer (ED) 200 A 2 pole 10 kA rated circuit breaker, pedestal type for padmount applications (splitter included)	60 5/32	11 7/8	5 27/64	59	26.8

CO2M Series

200 A – Single-phase 120/240 V; combination with or without breaker and splitter

Cat. no. CO2FB-KIT

Diagrams

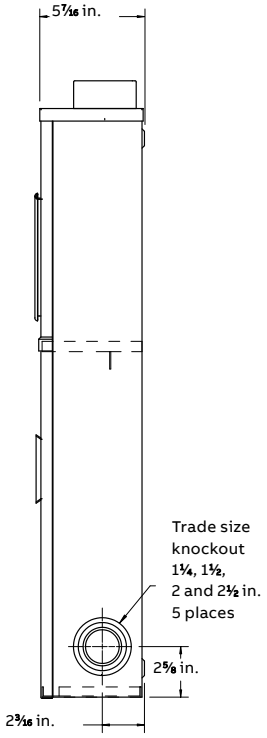

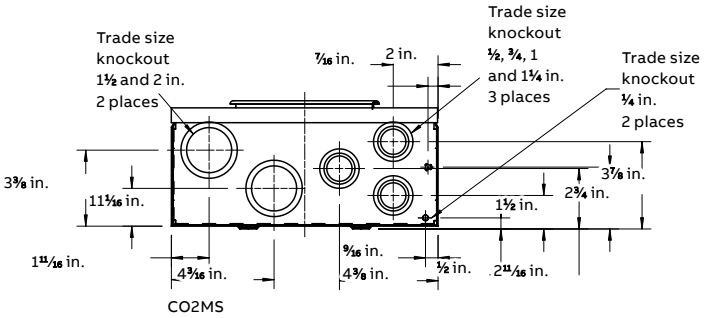

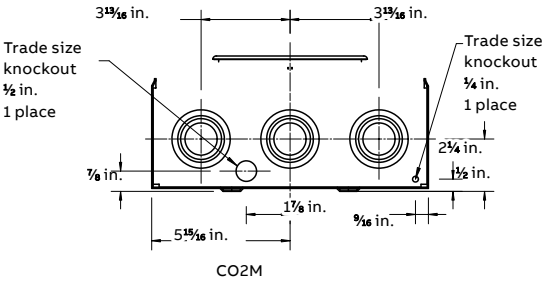

Diagram as reference only. Please contact your regional inside sales representative for other catalogue numbers and drawings pertaining to this series.

CO22 Series

200 A (main lugs), 200 A per position, single-phase 120/240 V; multiple position combination with or without breaker

Product specifications

- Conductor range: line: 6 AWG–250 kcmil, load side Conductor range: for ABB SACE A1A/A1N:4-1AWG or ABB SACE A2A/A2N:1 AWG-250 kcmil. For other approved circuit breakers, see manufacturer specifications. For load side,neutral side, conductor range: 6AWG-250 kcmil
- Aluminum tunnel type connectors for both load and line sides
- For overhead service only
- Factory pre-bussed from main lugs to each position
- Supplied with hub opening closure plate for underground service
- Internal locking system for covers
- Supplied with screw type sealing rings
- Factory installed 2 pole 10KA OR 22 KA (HI) breakers either an ABB or Siemens
- Eaton type ED breakers
- Factory installed adjustable bracket for field installation of Siemens type QJ(L), QJH(L), QR(L) and QRH(L), SQD type QBL, Eaton type ED
- Conductor kits are available to facilitate field installation of Siemens type QJ(L), QJH(L), QR(L) and QRH(L), SQD type QBL, Eaton type ED(L), refer to page D61
- Weatherproof Type 3R enclosure

Approved for copper or aluminum

CO22

	Cat. no.	Type	Description	Position	Dimensions (in.) H	W	D	Weight Each lb	kg
	Left-hand entry								
	CO22	Overhead only*	2 Gang, Provision for 2 X 2 pole 10 kA rated circuit breaker	2	30	17½	5½	40	18.14
	CO22-200	Overhead only*	2 Gang, Comes complete with 2 X 2 pole 200 A 10 kA rated circuit breaker	2	30	17½	5½	40	18.14
	CO22-200HI	Overhead only*	2 Gang, Comes complete with 2 X 2 pole 200 A 22 kA rated circuit breaker	2	30	17½	5½	60	27.21
	CO23	Overhead only*	3 Gang, Provision for 3 X 2 pole 10 kA rated circuit breaker	3	30	26¼	5½	60	27.21
	CO23-200	Overhead only*	3 Gang, Comes complete with 3 X 2 pole 200 A 10 kA rated circuit breaker	3	30	26¼	5½	60	27.21
	CO23-200HI	Overhead only*	3 Gang, Comes complete with 3 X 2 pole 200 A 22 kA rated circuit breaker	3	30	26¼	5½	80	36.29
	CO24	Overhead only*	4 Gang, Provision for 4 X 2 pole 10 kA rated circuit breaker	4	30	35	5½	80	36.28
	CO24-200	Overhead only*	4 Gang, Comes complete with 4 X 2 pole 200 A 10 kA rated circuit breaker	4	30	35	5½	80	36.28
	CO24-200HI	Overhead only*	4 Gang, Comes complete with 4 X 2 pole 200 A 22 kA rated circuit breaker	4	30	35	5½	100	45.36

Note: Ex. CO22-XXX, suffix (XXX) can be replaced by any of the following breaker amperage options: 100, 125 or 150.

CO22 Series

200 A (main lugs), 200 A per position, single-phase 120/240 V; multiple position combination with or without breaker

Diagrams

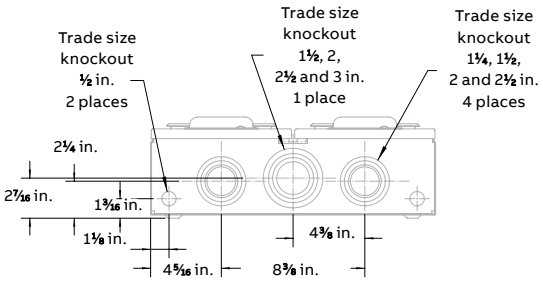

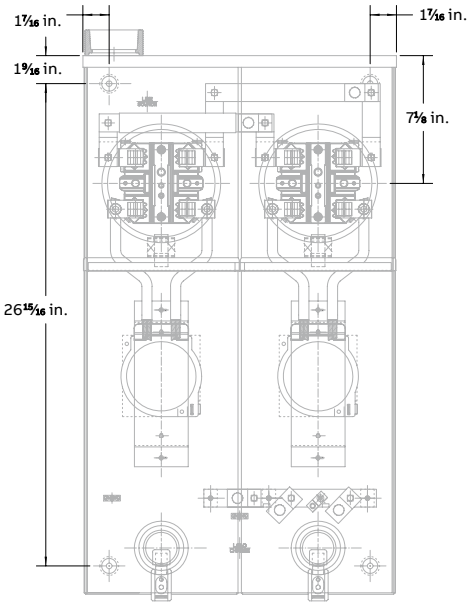

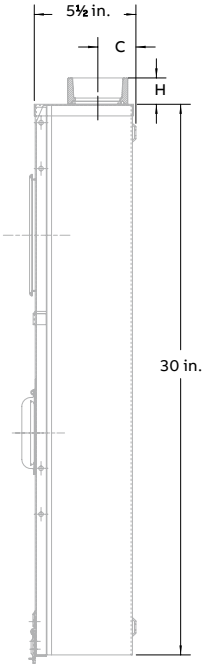

CO22-U Series

200 A (main lugs), 200 A per position, single-phase 120/240 V; multiple position combination with compartment with or without breaker

Product specifications

- Conductor range: line: single 1/2 in. stud to accommodate compression lugs,load side conductor range: for ABB SACE A1A/A1N:4-1AWG or ABB SACE A2A/A2N:1 AWG-250 kcmil. For other approved circuit breakers, see manufacturer specifications. For load side, neutral conductor range: 6AWG - 250 kcmil
- Aluminum tunnel type connectors for load sides
- For underground service only
- Factory pre-bussed from main lugs to each position
- Internal locking system for covers
- Supplied with screw type sealing rings
- Factory installed 2 pole 10KA OR 22 KA (HI) breakers either an ABB or Siemens
- Comes complete with blank compartment
- Factory installed adjustable bracket for field installation of Siemens type QJ(L), QJH(L), QR(L) and QRH(L), SQD type QBL, Eaton type ED
- Conductor kits are available to facilitate field installation of Siemens type QJ(L), QJH(L), QR(L) and QRH(L), SQD type QBL, Eaton type ED(L), refer to page D61
- CO3009A-KIT (ABB), CO3009-KIT (Siemens), CO3009SD-KIT (Square D) and CO3409FB-KIT (Eaton) conductor kits available (breakers not included) see page D61
- Weatherproof Type 3R enclosure

Approved for copper or aluminum

CO22-U

Cat. no.	Type	Description	Position	Dimensions (in.) H	W	D	Weight each lb	kg
Left-hand entry								
CO22-U	Underground only	2 Gang with blank compartment, Provision for 2 X 2 pole 10 kA rated circuit breaker	2	30	26¼	5½	60	27.21
CO22-200-U	Underground only	2 Gang with blank compartment, Comes complete with 2 X 2 pole 200 A 10 kA rated circuit breaker	2	30	26¼	5½	60	27.21
CO22-200HI-U	Underground only	2 Gang with blank compartment, Comes complete with 2 X 2 pole 200 A 22 kA rated circuit breaker	2	30	26¼	5½	60	27.21
CO23-U	Underground only	3 Gang with blank compartment, Provision for 3 X 2 pole 10 kA rated circuit breaker	3	30	35	5½	80	36.29
CO23-200-U	Underground only	3 Gang with blank compartment, Comes complete with ABB type A2A 3 X 2 pole 200 A 10 kA rated circuit breaker	3	30	35	5½	80	36.29
CO23-200HI-U	Underground only	3 Gang with blank compartment, Comes complete with ABB type A2N 3 X 2 pole 200 A 22 kA rated circuit breaker	3	30	35	5½	80	36.29
CO24-U	Underground only	4 Gang with blank compartment, Provision for 4 X 2 pole 10 kA rated circuit breaker	4	30	43¾	5½	100	45.36
CO24-200-U	Underground only	4 Gang with blank compartment, Comes complete with 4 X 2 pole 200 A 10 kA rated circuit breaker	4	30	43¾	5½	100	45.36
CO24-200HI-U	Underground only	4 Gang with blank compartment, Comes complete with 4 X 2 pole 200 A 22 kA rated circuit breaker	4	30	43¾	5½	100	45.36

Note: Ex. CO22-XXX, suffix (XXX) can be replaced by any of the following breaker amperage options: 100, 125 or 150.

CO22-U Series

200 A (main lugs), 200 A per position, single-phase 120/240 V; multiple position combination with compartment with or without breaker

Diagrams

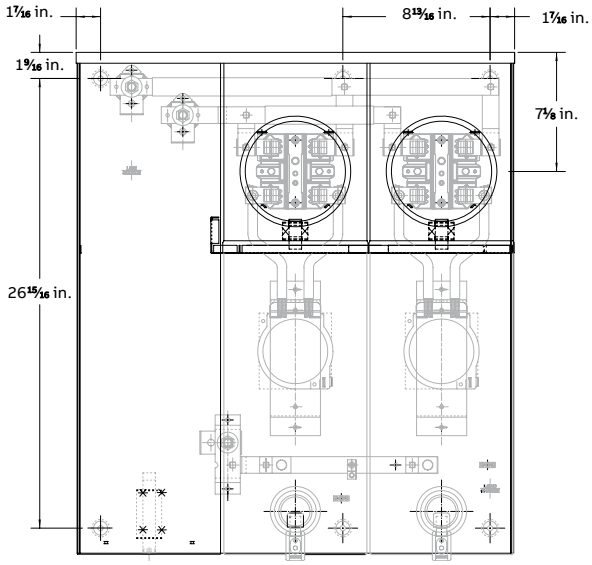

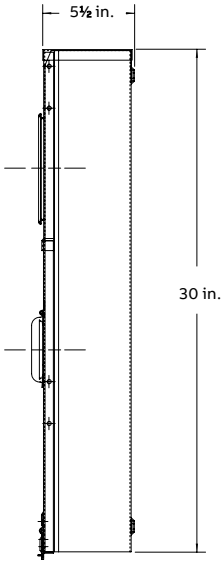

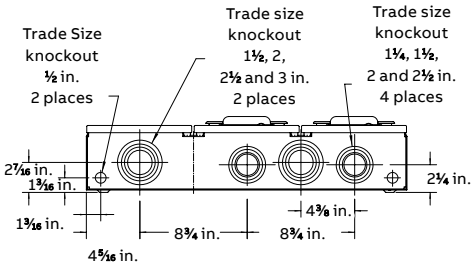

CO27 Series

200 A, 120/208 V; combination polyphase with breaker

Product specifications

- Line side and neutral conductor range: 6 AWG-250 kcmil (Aluminum Tunnel Type connectors)
- Load side conductor range: 3AWG-250 kcmil
- Aluminum tunnel type connectors
- Suitable for 120/208 V polyphase service entrance
- For overhead installation
- Larger hub opening requires use of 3 in., 3½ in. or 4 in. hubs unless BS052 adaptor plate is used
- Supplied with 10 kA Siemens QR 3 pole circuit breaker
- Weatherproof Type 3R enclosure
- Supplied with screw type rings

Approved for copper or aluminum

C027B

Cat. no.	Type	Description	Dimensions (in.) H	W	D	Weight each lb	kg
Left-hand entry, comes with breaker							
CO27B-100	Overhead	Comes with Siemens QR 100 A 3 pole 10 kA rated circuit breaker	32¾	12	5 7/16	30	13.6
CO27B-150	Overhead	Comes with Siemens QR 150 A 3 pole 10 kA rated circuit breaker	32¾	12	5 7/16	30	13.6
CO27B-200	Overhead	Comes with Siemens QR 200 A 3 pole 10 kA rated circuit breaker	32¾	12	5 7/16	30	13.6

CO27 Series

200 A, 120/208 V; combination polyphase with breaker

Diagrams

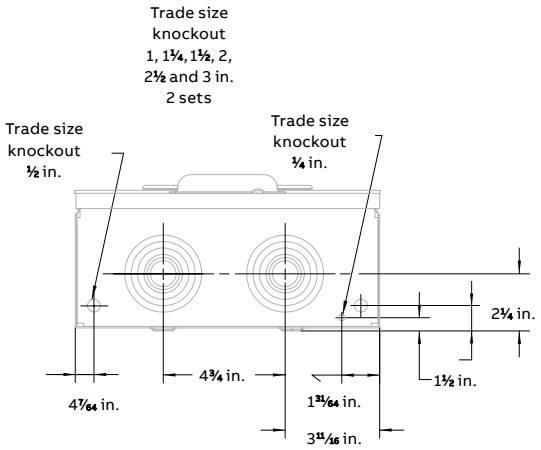

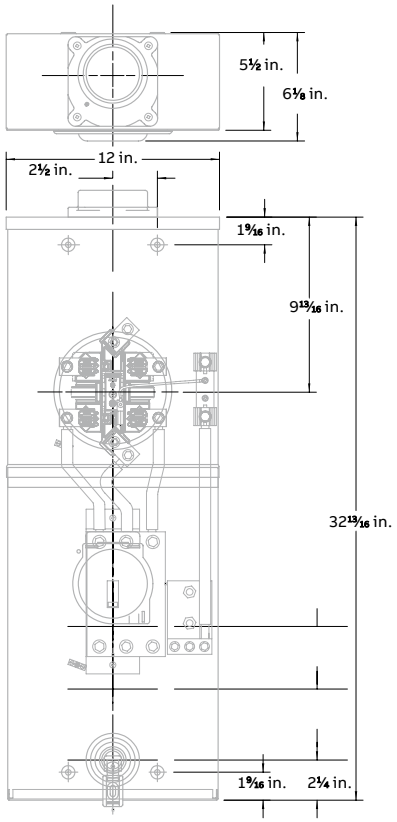

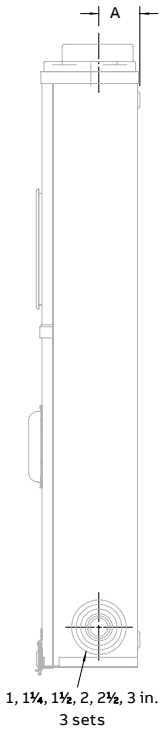

CO42 Series

400 A (main lugs), 200 A per position, single-phase 120/240 V; multiple position combination with compartment with or without breaker

Product specifications

- Conductor range: line: dual rated connectors for 1 x 4 AWG–600 kcmil or 2 x 1/0 AWG–250 kcmil, load: 6 AWG–250 kcmil
- Aluminum tunnel type connectors for both load and line sides
- Combination overhead/underground
- Factory pre-bussed from main lugs to each position
- Supplied with hub opening closure plate for underground service
- Internal locking system for covers
- Larger hub opening requires use of 3 in., 3½ in. or 4 in. hubs unless BS052 adaptor plate is used
- Comes complete with blank compartment
- Supplied with screw type rings
- Factory installed 2 pole 10KA OR 22 KA (HI) breakers either an ABB or Siemens
- Factory installed adjustable bracket for field installation of Siemens type QJ(L), QJH(L), QR(L) and QRH(L), SQD type QBL, Eaton type ED
- Conductor kits are available to facilitate field installation of Siemens type QJ(L), QJH(L), QR(L) and QRH(L), SQD type QBL, Eaton type ED(L), refer to page D61
- Weatherproof Type 3R enclosure

Approved for copper or aluminum

CO42

Cat. no.	Type	Description	Position	Dimensions (in.) H	W	D	Weight Each lb	kg
Left-hand entry								
CO42	Combination overhead/ underground	2 Gang with blank compartment, Provision for 2 X 2 pole 10 kA rated circuit breaker	2	37 11/16	26¼	5½	75	39
CO42-200	Combination overhead/ underground	2 Gang with blank compartment, Comes complete with 2 X 2 pole 200 A 10 kA rated circuit breaker	2	37 11/16	26¼	5½	75	39
CO42-200HI	Combination overhead/ underground	2 Gang with blank compartment, Comes complete with 2 X 2 pole 200 A 22 kA rated circuit breaker	2	37 11/16	26¼	5½	75	39
CO43	Combination overhead/ underground	3 Gang with blank compartment, Provision for 3 X 2 pole 10 kA rated circuit breaker	3	37 11/16	35	5½	100	36.29
CO43-200	Combination overhead/ underground	3 Gang with blank compartment, Comes complete with 3 X 2 pole 200 A 10 kA rated circuit breaker	3	37 11/16	35	5½	100	36.29
CO43-200HI	Combination overhead/ underground	3 Gang with blank compartment, Comes complete with 3 X 2 pole 200 A 22 kA rated circuit breaker	3	37 11/16	35	5½	100	36.29
CO44	Combination overhead/ underground	4 Gang with blank compartment, Provision for 4 X 2 pole 10 kA rated circuit breaker	4	37 11/16	43¾	5½	125	56.70
CO44-200	Combination overhead/ underground	4 Gang with blank compartment, Comes complete with 4 X 2 pole 200 A 10 kA rated circuit breaker	4	37 11/16	43¾	5½	125	56.70
CO44-200HI	Combination overhead/ underground	4 Gang with blank compartment, Comes complete with 4 X 2 pole 200 A 22 kA rated circuit breaker	4	37 11/16	43¾	5½	125	56.70

Note: Ex. CO42-XXX, suffix (XXX) can be replaced by any of the following breaker amperage options: 100, 125 or 150.

CO42 Series

400 A (main lugs), 200 A per position, single-phase 120/240 V; multiple position combination with compartment with or without breaker

Diagrams

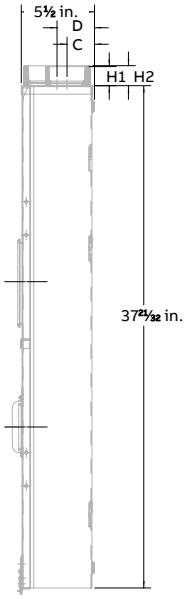

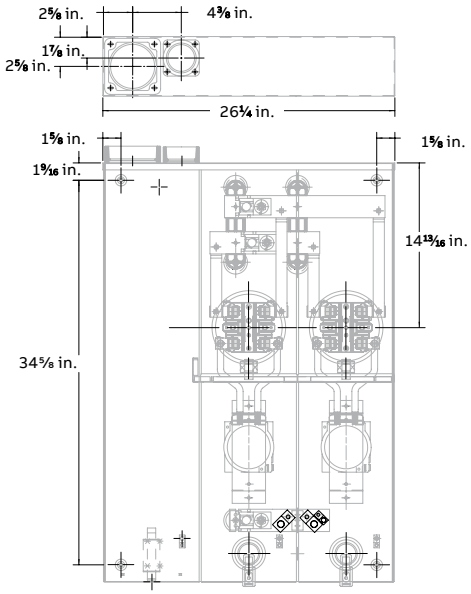

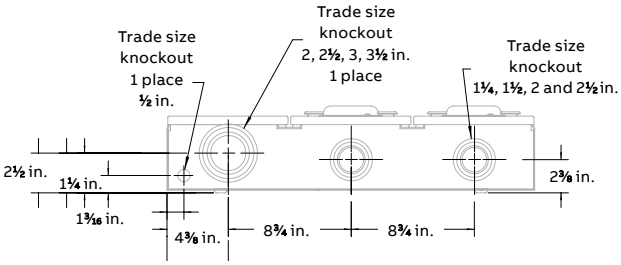

BP320 Series

320 A 240 V self-contained meter socket

BP320-TV-250B

BP320-TV-250

BP250

BP3403CB-FG

Product specifications

- 320 A 240 V maximum self-contained meter socket with bypass mechanism
- Single-phase service
- Weatherproof type 3R enclosure
- Connection to 1 or 2 electrical distribution for a nominal load of 320A
- Allow grounding at the electrical panel or meter socket
- Easy conversion to an insulated neutral by removing the bonding jumper
- Supplied with screw type sealing ring
- Underground versions require the use of compression lugs on the line side
- Made in Canada

Approved for copper or aluminum

Cat. no.	Service		Description
Meter Socket	Overhead	Underground	
BP320-V	✓	–	120/240 V with single connectors load side
BP320-V-250	✓	–	120/240 V with double connectors load side
BP320-V-250B	✓	–	120/240 V with double connectors load side and full-size neutral line side
BP320-TV	–	✓	120/240 V with single connectors load side
BP320-TV-250	–	✓	120/240 V with double connectors load side
BP320-TV-250B	–	✓	120/240 V with double connectors load side and full-size neutral line side

Colour: Grey
Outer enclosure dimensions - in. (cm): 34-1/16 (86.5) H x 15-9/16 (39.5) W x 5-15/16 (15.1) D
Meter socket weight: 47 lb / 21.31 kg

Conversion kits	
BP250	For conversion to double load side, 2 x 250 kcmil (2 per kit)
BP500	For conversion to single load side, 1 x 500 kcmil (3 per kit)
BP3403CB-FG	Replacement insert kit for BP320

Connectors and conductors approved for use with BP320 series meter sockets

		Overhead service			Underground service		
		BP320-V-250	BP320-V	BP320-V-250B	BP320-TV-250	BP320-TV	BP320-TV-250B
Line side	Single run service entrance	Tunnel-type connectors 1 x 1/0-500 kcmil Neutral 2 x 6-250 kcmil	Tunnel-type connectors 1 x 1/0-500 kcmil Neutral 2 x 6-250 kcmil	Tunnel-type connectors 1 x 1/0-500 kcmil	Double 1/2 in. studs for compression lugs 1 x 500 kcmil max.	Double 1/2 in. studs for compression lugs 1 x 500 kcmil max.	Double 1/2 in. studs for compression lugs 1 x 500 kcmil max.
	Parallel run service entrance	Tunnel-type connectors 2 x 1/0-250 kcmil Neutral 2 x 6-250 kcmil	Tunnel-type connectors 2 x 1/0-250 kcmil Neutral 2 x 6-250 kcmil	Tunnel-type connectors 2 x 1/0-250 kcmil	Double 1/2 in. studs for compression lugs 2 x 250 kcmil max.	Double 1/2 in. studs for compression lugs 2 x 250 kcmil max.	n/a
Load side	Connection to 1 distribution panel	BP500 conversion kit	Tunnel-type connectors 1 x 1/0-500 kcmil	BP500 conversion kit	BP500 conversion kit	Tunnel-type connectors 1 x 1/0-500 kcmil Neutral 2 x 6-250 kcmil	BP500 conversion kit
	Connection to 2 distribution panels	Tunnel-type connectors 2 x 6-250 kcmil	BP250 conversion kit	Tunnel-type connectors 2 x 6-250 kcmil	Tunnel-type connectors 2 x 6-250 kcmil	BP250 conversion kit	Tunnel-type connectors 2 x 6-250 kcmil

BP320 Series

320 A 240 V self-contained meter socket

Diagrams

Overhead

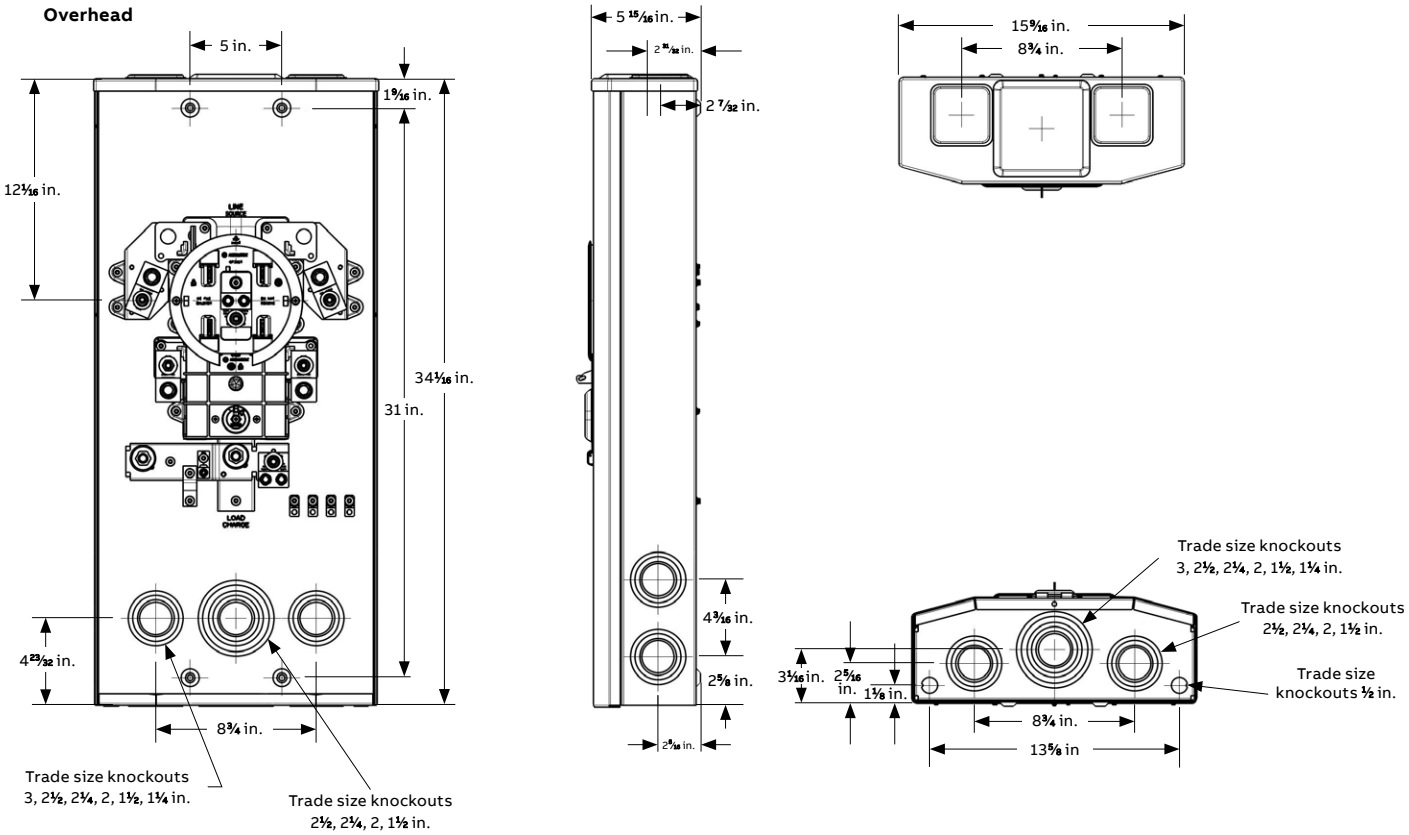

Underground

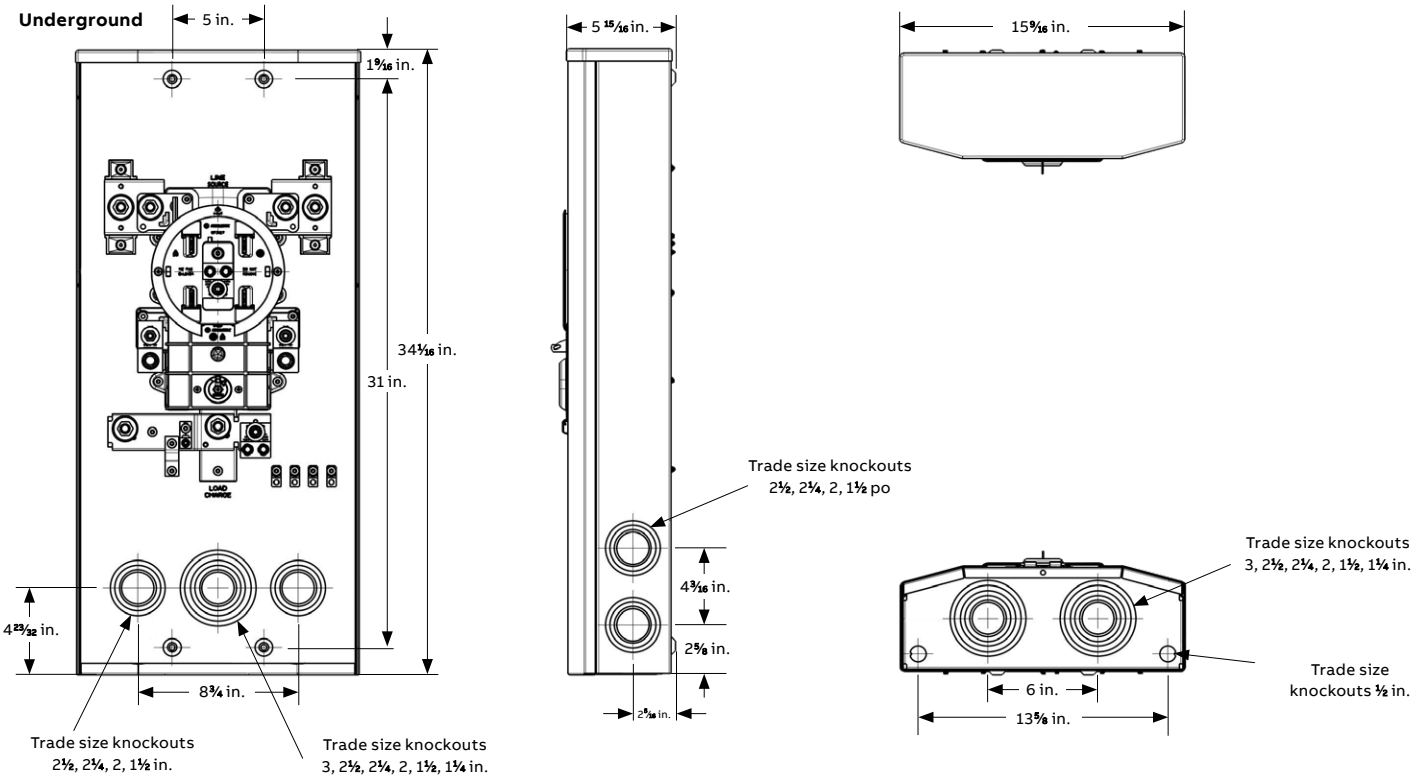

FA4B-6T

400 A 600 V; "all in one" transformer rated

FA4B-6T

Product specifications

- Max. single conductor 600 kcmil Cu or dual parallel conductors 250 kcmil Cu/Al
- For underground service only
- Meter socket configuration for 6 jaws
- Complete with 6 pole test switch
- Complete with 2 fuseholders and 3 A 600 V fuses
- Installation of current transformer at discretion of utility
- Two 1 in., 1 ¼ in., 1 ½ in., 2 in., 2 ½ and 3 in. bottom KOs
- Permanent red nameplate affixed to front cover warns that removal of meter does not isolate the load terminals; also warning to short circuit current transformer (secondary) before removal of meter
- Weatherproof Type 3R enclosure
- Primarily used in: Alberta
- For installations with grounding made at the meter socket.

Note: Photo is of an installed meter socket; current transformers are not included.

Approved for copper or aluminum

		Dimensions (in.)			Weight each	
Cat. no.	**Description**	**H**	**L**	**P**	**lb**	**kg**
FA4B-6T	Underground, comes with 6 pole test switch	13 5/16	8 7/16	**43 3/4**	50	22.67

Diagrams

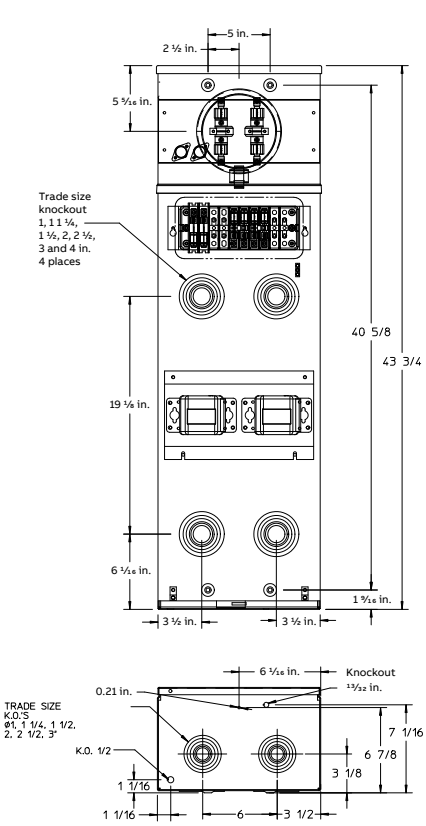

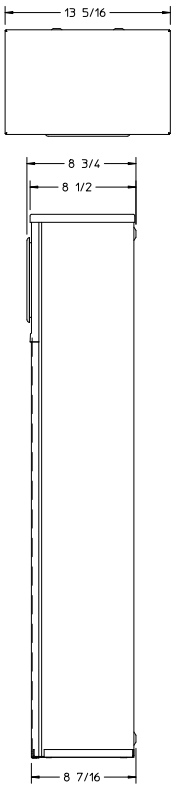

JS4 Series

400 A 120/240 V; single-phase service

JS4B

KIT-400MH
(see page D71)

Product specifications

- Approved for use with field-installed conductor sized as per CE Code, Part 1 Allowable Ampacity Column 90°C for 3 conductors in raceway
- Load side terminations: tunnel type connectors, dual rated for 1 x 500 kcmil or 2 x 250 kcmil
- Fully wired secondary circuits
- Line side terminations: double ½ in. studs to accommodate compression lugs for underground service (1 x 500 kcmil or 2 x 250 kcmil)
- Permanent red nameplate affixed to front cover warns that removal of meter does not isolate the load terminals; warning to short circuit current transformer secondary before removal of meter on JS4B
- Meter socket configuration for 5 jaw meters (can be readily converted to suit meter forms requiring 4 blades)
- 400/5 A three-wire current transformer provides low current for service metering proportional to higher current draw; Consumer and Corporate Affairs Canada approved for revenue metering (200/5 and 300/5 A also available)
- Gutter wiring space provided on left side
- Twin covers allow access to either compartment (single cover available on request)
- Hub opening closure plate for underground service (All units can be converted to overhead service with addition of conduit hub and JS250 or JS500 tunnel type connector kit)
- Hinged bridges and readily removable crossbar with keyholes permit easy wiring without obstructions
- Heavy gauge galvanized steel with oven-cured grey enamel finish
- For aluminum JS4, see page D49 for product specs and dimensions
- Weatherproof Type 3R enclosure
- Provincial approval may change without notice. Consult your local utility.

Product usage by province/utility

Approved for copper or aluminum

Newfoundland	JS4B-4ST, JS4B-NL, JS4B-EALNL	**Saskatchewan**	None approved	**Northern Ontario**	None approved
Quebec	None approved	**Alberta**	JS4B-4T	**Cornwall Hydro**	None approved
Nova Scotia	JS4B-STNS, JS4B STNSEAL	**British Columbia**	JS4B-STWINL	**Ottawa Hydro**	None approved
New Brunswick	JS4B (EAL)	**Hydro Ontario**	JS4B-4 JS4B-ST	**Toronto Hydro**	None approved
Manitoba	JS4B-TWLMH	**Hydro-One**	JS4B-INTLHO		

Diagrams

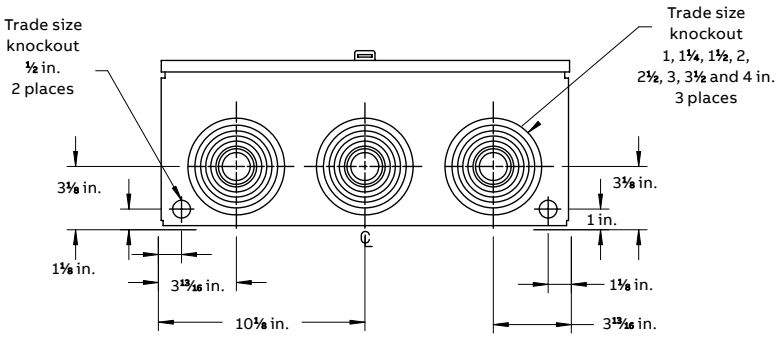

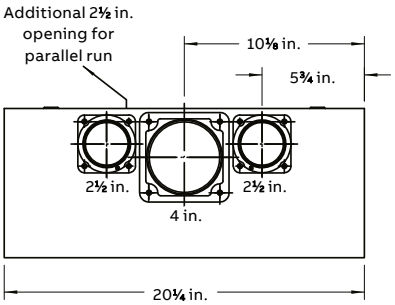

JS4 Series

400 A 120/240 V; Single-phase service

Underground service

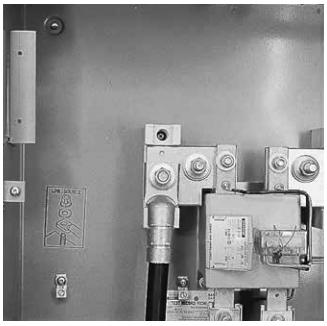

1 x 500 kcmil

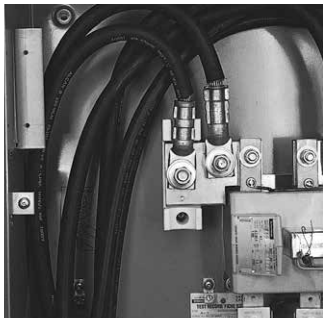

2 x 250 kcmil

Overhead service

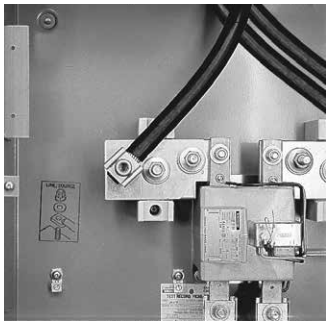

1 x 500 kcmil
with kit no. JS500

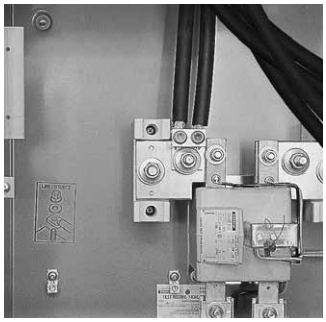

2 x 250 kcmil
with kit no. JS250

Approved for copper or aluminum

Cat. no.	JS4 underground 400 to 5 ratio • 5 jaw • twin cover
JS4B	Equipped with test switches

Include	Factory modifications
-4	4 jaw meter socket configuration
-S	Provision only for test switches (test switches supplied by power authority)
-T	Provision only for current transformer (transformer supplied by power authority)
-W	Secondary circuit wiring not included (secondary circuit wired by power authority)
-200 / 5	200 A to 5 ratio current transformer
-300 / 5	300 A to 5 ratio current transformer

Cat. no.	Overhead entry conversion kits (1 kit required per socket)
JS250	400 AMP. 90°C, 2 x 250 kcmil tunnel connector kit for line side terminations
JS500	400 AMP. 90°C, 1 x 500 kcmil tunnel connector kit for line side terminations
JS750	2 x 750 kcmil connector kit for line side termination for JS4B-EAL and JS4B-EALNL
KIT-JS4B	5th jaw assembly kit for NB Power

Note: Refer to page D51 for “Product usage by province utility.”

JS4 Aluminum series

Single-phase service

Product specifications

- Line side terminals: overhead: 1 x 750 kcmil Cu/Al or 2 x 350 kcmil Cu/Al; underground: 2 x ½ in. stud to accommodate, 1 x 750 kcmil or 2 x 350 kcmil Cu/Al compression lugs
- Load side terminals: 1 x 750 kcmil Cu/Al or 2 x 250 kcmil Cu/Al
- Combination overhead/underground meter socket
- 4 jaw meter socket configuration
- Overhead kit required (1 kit per socket) (line side only*)
- JS350 2 x 350 kcmil overhead kit
- JS750 1 x 750 kcmil overhead kit

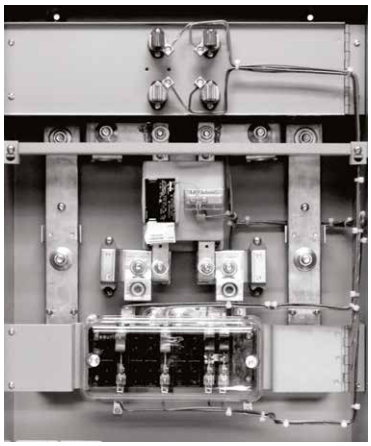

JS4B-EAL
(New Brunswick)

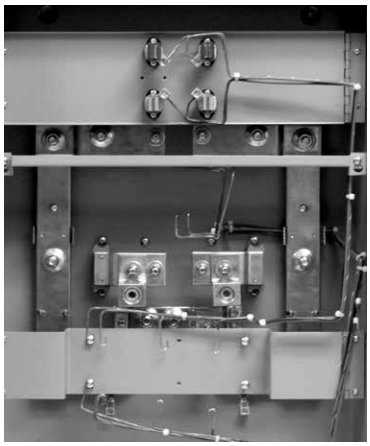

JS4B-STNSEAL
(Nova Scotia)

Approved for copper or aluminum

		Dimensions (in.)			Weight each	
Cat. no.	**Description**	**H**	**W**	**D**	**lb**	**kg**
JS4B-EAL	Aluminum feed 400 A meter socket (New Brunswick only)	38⅛	20¹⁄₁₆	8½	72	32.65
JS4B-STNSEAL	Aluminum feed 400 A meter socket (Nova Scotia only)	38⅛	20¹⁄₁₆	8½	72	32.65

Diagrams

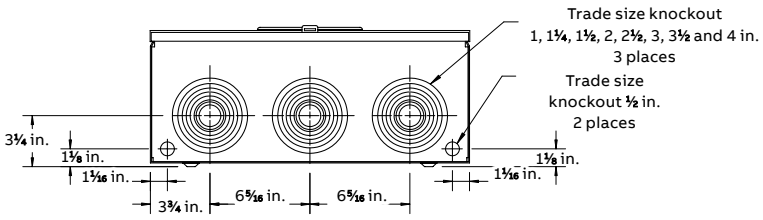

Typical wiring diagrams

Reference meter sockets

4 Jaw
110/220 V 1PH3 W

BA3
BE1
BQ2
BS2
MO2
CO2
BP320

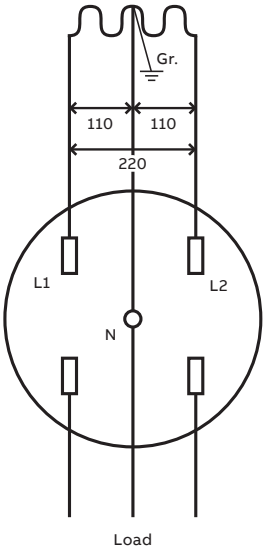

Reference meter sockets

7 Jaw
3 PH 4 W

PL17
PL27

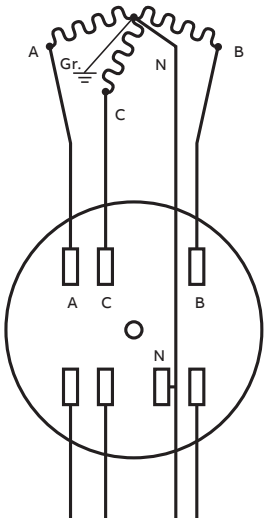

Reference meter sockets

5 Jaw
3 PH 4 W

BE1-5
BQ2-5
BS2-5

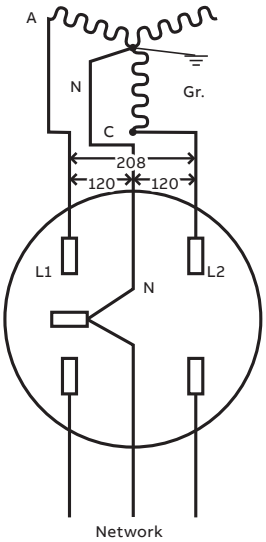

Reference meter sockets

5 Jaw
3 PH 3 W

BE1-5-INV
BS2-5-IN

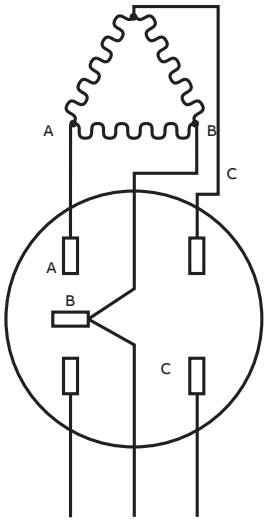

Typical wiring diagrams

Reference meter sockets — **4 Jaw 1 PH CMS**

CT104
CL4-V

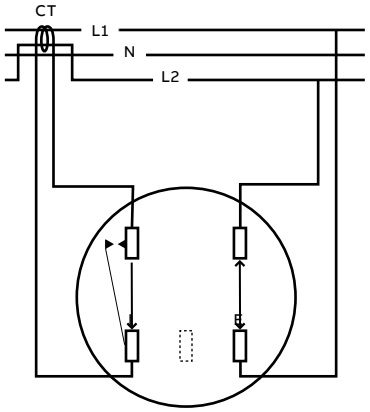

Reference meter sockets — **8 Jaw 3 PH 3 W**

CT108

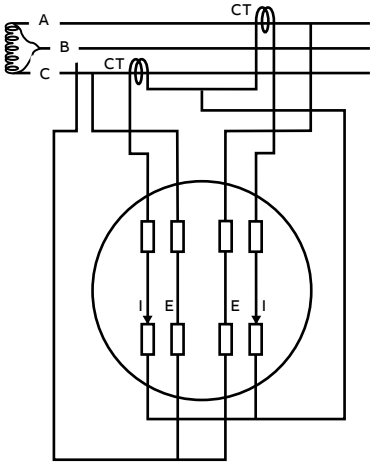

Reference meter sockets — **13 Jaw 3 PH 3 W**

CT113

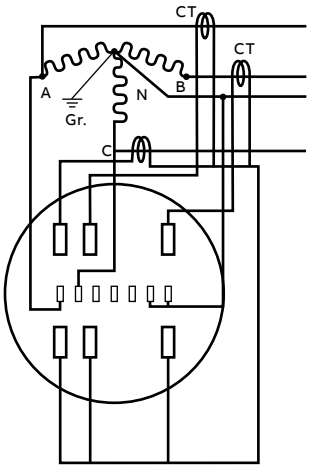

Accessories

Stainless steel sealing ring

	Cat. no.	Description
	MSR-C2	Stainless steel sealing ring, tamper-proof

Meter protectors

Product specifications

- Meter protector for use in problem areas (trailer parks, playgrounds, conservation areas)
- Steel construction (16 ga. galv. steel)
- Clear, unbreakable polycarbonate front cover, which allows full view of meter revenue reading and serial number
- Sealing and padlocking provision
- Grey painted

Cat. no.	Description
MP01	7⅙ in. dia. x 4¾ in. deep for use with single-phase residential meters
MP02	7⅙ in. dia. x 8¾ in. deep for use with all meters, other than single-phase residential meters

Accessories

Blank meter cover plates

Cat. no.	Description
BS087	Grey ABS
BS089	Plastic “throw-away” cover
BS090	Clear unbreakable polycarbonate

Not recommended as a permanent cover for energized meter sockets.

Jumper bar

Cat. no.	Description
CM-BS100	200 A max.

Mast coupler

Cat. no.	Description
MH200	Fits all sockets with regular 2½ in. hub opening

Hubs for rigid conduit

MH10X

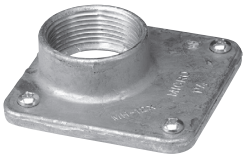

Cat. no.	PVC cat. no.	A hub size (in.)	B
MH10X	—	1	For 2½ in. regular hub opening (add hub adapter plate BS052 if used with units having 4 in. hub openings)
MH12X	E991G	1¼	
MH15	E991H	1½	
MH20	E991J	2	
MH25	E991K	2½	
MH30	E991L	3	For 4 in. hub opening
MH35	—	3½	
MH40	—	4	

Diagram

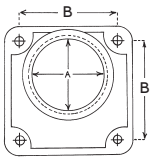

Supplied with 4 Robertson head screws.

Accessories

Hub adapter plate

	Cat. no.	Description
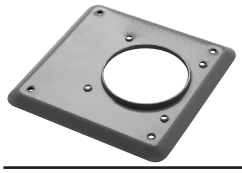	BS052	Permits use of regular size hubs on larger hub openings

Hub opening closure plates

	Cat. no.	Description
	BS051	Inside attachment for regular hub opening (i.e. 1 in. to 2½ in.)
	BS054	Inside attachment for larger hub opening (i.e. 3 in. to 4 in.)

Single-gang meter sockets insulated neutral kits

	Cat. no.	Description
	IN1000-M, IN1000-S	100 A series BA/BE, 100 A series PL17
	IN2000-M, IN2000-S	200 A series BQ/BS, 200 A series PL27

-M means installs in middle
-S means installs on side
Specify socket when ordering.

Single-gang meter sockets ground lug on neutral kit

	Cat. no.	Description
	GN1000	100A Max, for BA, BE series
	GN2000	200 A Max. for BQ2, BS2 series

Click on the button to get to the meter socket conversion kits cross-reference chart. **Click here**

Accessories

Multi-gang meter sockets insulated neutral kit

Cat. no.	Description
IN4000-2, IN4000-3, IN4000-4, IN4000-5, IN4000-6	BDAX, BDCX, BEX, BECX, BSC4X, CO1X series

Click on the button to get to the meter socket conversion kits cross-reference chart. **Click here**

Multi-gang tunnel lugs kit

Cat. no.	Description	Qty.
LA300ZFAB-FG	BECX-V, BECX-VA, BDCX-V, BDCX-VA series	3 lugs (kit)

Identification marker kits

Cat. no.	Description	Markers Kit Includes	Qty.
MINI-ID-KIT	Plastic case	Stainless steel markers of each numbers 0 through 9 (dash + service)	10
MICRO-ID-KIT	Blue metal carrying case	Stainless steel markers of each letters A through D	10
		Stainless steel markers of each numbers 0 through 9	10
		Word “SERVICE”	10
		CM-BS100 Jumper bar 200 A max.	4
		BS2027-FG Meter jaw safety shroud	10

Identification markers

Consist of thermoplastic insulators with jaws and connectors assembled for replacement of one meter socket

Cat. no.	Description
No. 0 through No. 9	Clipped to the upper lip of the enclosure; provides permanent customer identification; packed and sold in polyethylene bags of 10 identical markers except “SERVICE” which has 7 individual letters
No. A through No. Z	
No. SERVICE	

Accessories

Ready-to-install replacement block assemblies

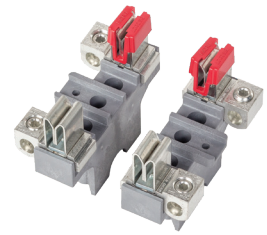

Cat. no.	Description
BA3-X	Fits BA3 / BE1 series

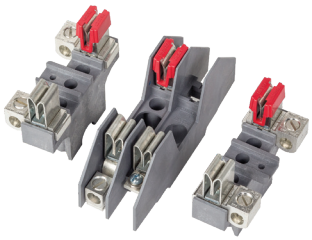

Cat. no.	Description
PL17X	Neutral 200 A

Cat. no.	Description
BS2-X-UNI	Fits BQ2 / BS2 series uni block
BS2-XIN-UNI	Fits BQ2/BS2 series with insulated neutral uni block
BS2-XGN-UNI	Fits BQ2/BS2 series with ground lug on neutral uni block

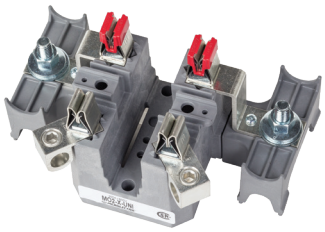

Cat. no.	Description
MO2-X-UNI	Fits MO2 series uni block

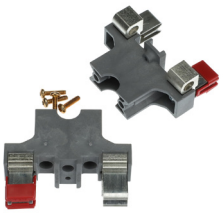

Cat. no.	Description
BA3-X	Replacement block ASMS BA/BE1
BS2-X-UNI	Replacement (repair) uni block BQ/BS (old design)
BS2-Y-UNI	Replacement (repair) uni block BQ/BS (new design)
BS2M-X-UNI	Replacement (repair) uni block BS2M
BS2M-YGN-UNI	Replacement (repair) uni block BS2M (new design)
BS2SA-XB	Bridge ASM for sask mach works
BS2-XGN-UNI	Replacement uni block BQ/BS-GN
BS2-YGN-UNI	Replacement (repair) uni block BQ/BS (new design)
BS2-YIN-UNI	Replacement uni block BQ/BS-IN

Accessories

Repair kits

Available replacement block accesories. Simply add suffix -FG to the components listed in the kit.

Bond lug

	Cat. no.	Description
	BONDLUG2-FG	Bond lug to be used in BE1, BQ2, BS2, MO2–
	NA75Z-3-FG	Bond lug to be used in BS2-TCVBC

Neutral lug

	Cat. no.	Description
	BS8608-FG	Neutral for MO2 200 A
	CDA110-FG	Neutral for BE1 100 A

Shroud

	Cat. no.	Description
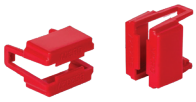	BS2027-FG	Red meter jaw safety shroud

Set screw

	Cat. no.	Description
	SCREW-BS1002-FG 100A	Set screw only for 100 A lugs
	SCREW-BS2402-FG 200A	Set screw only for 200 A lugs

Neutral

	Cat. no.	Description
	BS2811L-FG	Neutral 200 A
	BS2811GN-FG	Neutral 200 A, comes with ground lug on neutral

Accessories

Fifth jaw assemblies

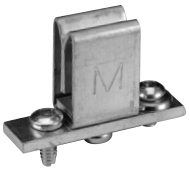

Meter socket series	Standard capacity 9 o'clock position C205
BA3	•
BDC	•
BE1	•
BE2	•
BEC	•
BD2	•
BQ2	•
BS2 / BS2L	•
BS4 / BSC4	•
CO1	•
CO2	•
CO1 Multigang	•
MO2	•
JS4B	•

Pole mount bracket kit

Cat. no.	Description	Conductor range (AWG)	Use with series	Option 1	Option 2
PMB200	Secures Microlectric meter socket to a wooden pole via option 1 or 2	14–2	BA3, BE1, BP320 BQ2, BS, CL, CO1, CO2, CT, MO2, PL17, PL27, VT	Use a lag bolt through ⅝ in. center keyhole	Use the two side bracket mounting holes (0.320 in. dia.) to wrap around the pole

Suitable for any Microlectric meter socket with mounting holes 5 in. apart. Attach meter socket using one or two bracket(s).
PMB200 kit comes complete with 2 brackets, 1 ground connector. Includes assembly hardware.

Accessories

Pole mounting kit

	Cat. no.	Kit includes	Weight lb	Weight kg	Qty.
	PMBJS4	Support hangers	9.03	4.09	2
		½ in. x 4 in. lag bolt	–	–	1
		⅜ in. x 3 in. lag bolt	–	–	4
		5⁄16 in. x 1 in. carriage bolts, nuts and lock washers	–	–	–
	PMB6X12	6 in. offset from pole c/w 12 in. strut	7.7	3.5	1
	PMB6X24	6 in. offset from pole, comes with 24 in. strut	9.2	4.2	1
	PMB9X12	9 in. offset from pole, comes with 12 in. strut	9.2	4.2	1
	PMB9X24	9 in. offset from pole, comes with 24 in. strut	11.0	5.0	1

Pole line hardware

Cat. no.	Description	F dia. (in.)	G dia. (in.)	H dia. (in.)	T thick (in.)	Weight (100 pcs) lb	Weight (100 pcs) kg	Std. pkg.
RC729	Square washer	⅝	2	–	3⁄16	22	10.0	400
BC301L	Carriage bolt	⅜	1½	1½	–	11	5.0	50
BO506	Oval eye bolt	⅝	6	3	–	122	55.4	50
BO508	Oval eye bolt	⅝	8	4	–	136	61.8	50
BO510	Oval eye bolt	⅝	10	4	–	150	68.1	50
BO512	Oval eye bolt	⅝	12	4	–	168	76.3	50

Diagrams

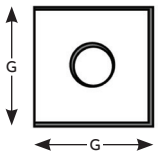

RC729

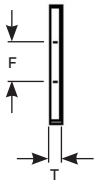

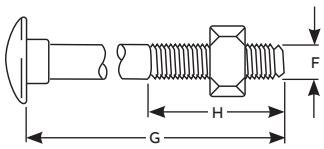

BC301L

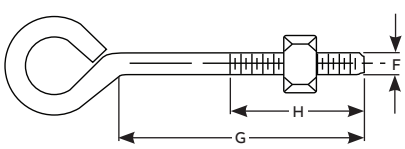

BO series

Accessories

Breaker mounting bracket

	Cat. no.	Description
	CO3517M-FG	Adjustable mounting bracket for CO2, CO22 and CO42 series to adapt to Siemens, Square D and Eaton breakers

Flexible braid and conductor kits

	Cat. no.	Description
	CO2FB-KIT	Connection wire adaptor kit for CO2 series meter sockets for field installation; to be used with Cutler Hammer breakers
	CO3009-KIT	Siemens type "QR" breaker conductor kit (breakers not included)
	CO3009SD-KIT	Square D breaker conductor kit (breakers not included)
	CO3409FB-KIT	Eaton breaker flexible braid kit (breakers not included)
	CO3009A2-KIT	ABB breaker conductor kit (breakers not included)
	CO1009A1-KIT	ABB Breaker conductor kit for 100 A type A1A

Connector kit

	Cat. no.	Description
	BP250	Connector kit 2 x 250 kcmil
	BP500	Connector kit single lug

Breakers

	Cat. no.	Description
	A1A100TL2TNB-FG	ABB 100 A 10 kA breaker
	A1N100TL2TNB-FG	ABB 100 A 22 kA breaker
	A2A125TL2TNB-FG	ABB 125 A 10 kA breaker
	A2A150TL2TNB-FG	ABB 150 A 10 kA breaker
	A2A200TL2TNB-FG	ABB 200 A 10 kA breaker
	A2N125TL2TNB-FG	ABB 125 A 22 kA breaker
	A2N150TL2TNB-FG	ABB 150 A 22 kA breaker
	A2N200TL2TNB-FG	ABB 200 A 22 kA breaker

Meter covers

Meter series	With meter hole	Without meter hole
BA	1 X BS3321 FG	–
BE1	1 X BS1321 FG	–
BE2V	2 X BS1321 FG	–
BE3V	3 X BS1321 FG	–
BE4V	4 X BS1321 FG	–
BE5V	5 X BS1321 FG	–
BE6V	6 X BS1321 FG	–
BEC2V	2 X BS4321 FG	1 X BS4321A FG
BEC3V	3 X BS4321 FG	1 X BS4321A FG
BEC4V	4 X BS4321 FG	1 X BS4321A FG
BEC5V	5 X BS4321 FG	1 X BS4321A FG
BEC6V	6 X BS4321 FG	1 X BS4321A FG
BP2-TV	1 X PL7321 FG	–
BS2-TCVFA	1 X BSC3321FA FG	–
BQ2V	1 X BS2321 FG	–
BS2V	1 X BSC2321 FG	–
BS2L	1 X BSC2321 FG	–
MO2V/ VO	1 X BS8321 FG	–
PL17	1 X BS2321 FG	–
PL27	1 X PL7321 FG	–
BS42	2 X BS5521-FG	1 X BS5521A-FG
BS43	3 X BS5521-FG	1 X BS5521A-FG
BS44	4 X BS5521-FG	1 X BS5521A-FG
BS45	5 X BS5521-FG	1 X BS5521A-FG
BS46	6 X BS5521-FG	1 X BS5521A-FG
BSC42V	2 X BS5521-FG	2 X BS5521A-FG
BSC43V	3 X BS5521-FG	2 X BS5521A-FG
BSC44V	4 X BS5521-FG	2 X BS5521A-FG
BSC45V	5 X BS5521-FG	2 X BS5521A-FG
BSC46V	6 X BS5521-FG	2 X BS5521A-FG
BD2V	2 X BD5421 FG	1 X BD5421A FG
BD3V	3 X BD5421 FG	1 X BD5421A FG
BD4V	4 X BD5421 FG	1 X BD5421A FG
BDC2	2 X BD5421 FG	1 x BDA5521A FG
BDC3	3 X BD5421 FG	1 x BDA5521A FG
BDC4	4 X BD5421 FG	1 x BDA5521A FG
BDC2-VAILBC	BD5421ABC-FG	1 X BD5421BC-FG
BDC3-VAILBC	BD5421ABC-FG	1 X BD5421BC-FG
BDC4-VAILBC	BD5421ABC-FG	1 X BD5421BC-FG

Meter series	Top cover “meter”	Bottom cover “breaker”
CO1	CO2321 FG	CO2023 FG
CO2	CO3322 FG	CO3021 FG
CO2M	CO3322 MFG	CO3021 FG

Meter series	Top	Middle	Bottom
CO2MS	CO3322 MFG	CO3321 MSFG	CO3323 MSFG

Meter series	Top cover “meter”	Bottom cover
CT104-5SWLHQ	CT2321FG	CT2023FG
CT-L	CT1321FG	CT1023FG
CT-SWL	CT1321FG	CT1023FG
CT	CT1321FG	CT1021AFG
CL	BS3321FG	–
HD	HD1021AFG	HD1022A FG
JS4	JS5321AFG	JS5221B FG
JS4 (EAL)	JS5321AFG	JS5221B EAL

Meter series	Top cover “meter”	Bottom cover
CO22	CO5322FG	CO8021FG
CO42	CO8342FG	C08021FG
CO27	CO3322FG	CO3021FG

Service masts

Service entrance masts and accessories

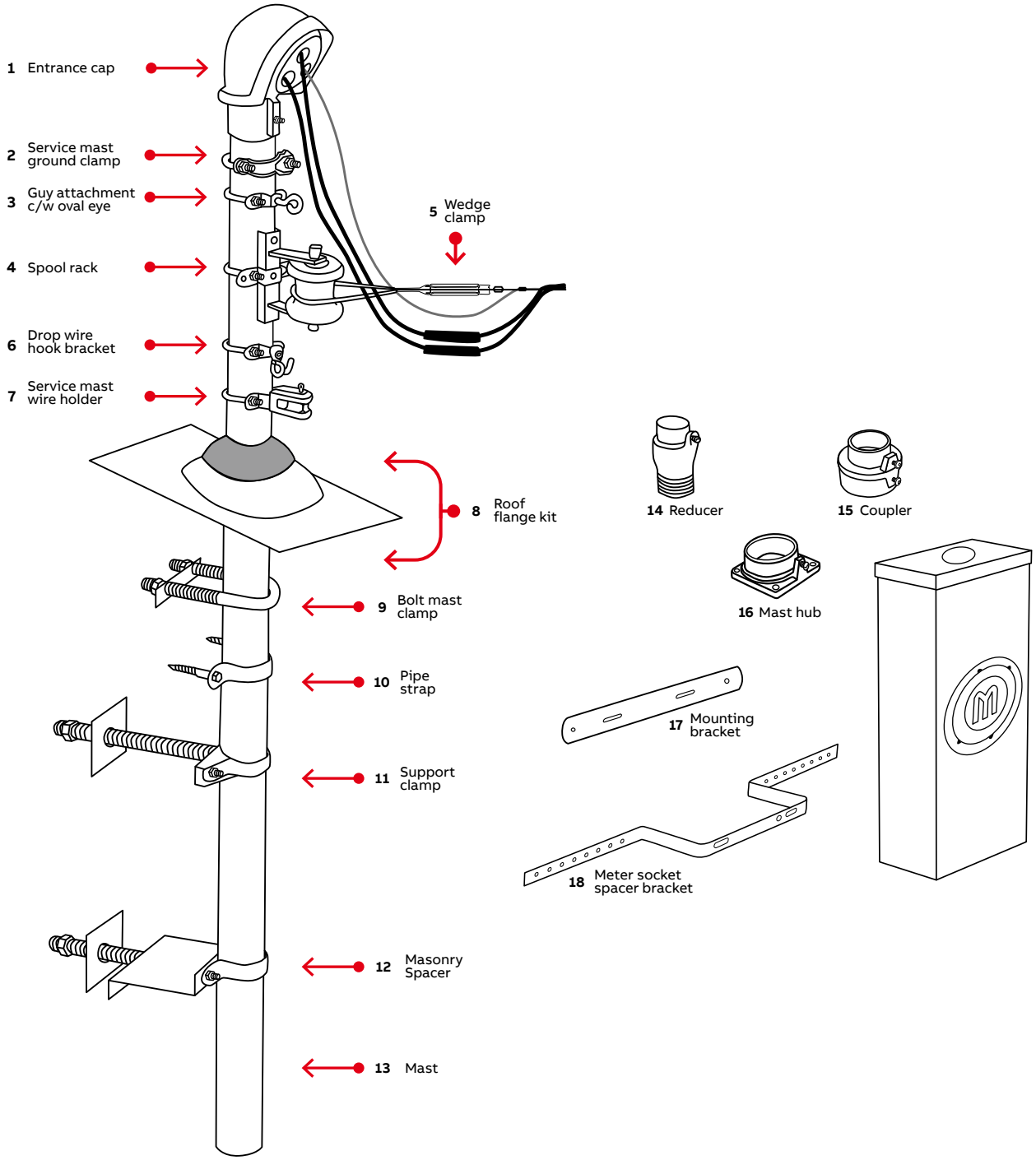

Service masts

Service entrance masts and accessories

Ref. No.	Steel	PVC	Description
1	MM104		100A - 1 1/4" Entrance cap for 2 1/2" mast
		E998G	100A - 1 1/4" Entrance cap
		E998H	100A - 1 1/2" Entrance cap
	MM202		200A - 2" Entrance cap for 2 1/2". mast
	MM202P		200A - 2" Entrance cap for old style 2 3/4" mast
		E998J	200A - 2" Entrance cap
		E998K-UPC	200A - 2 1/2" Entrance cap
		E998L	320A - 3" Entrance cap
		E998N	320A/400A - 4" Entrance cap
	CIEFA-4		400A - 4" Entrance cap for 4" rigid conduit
2	MM700		Service mast ground clamp, wire range: 8–1/0 AWG
3	MM380		Guy attachment c/w oval eye
4	MM101		100A - Light duty spool rack
	MM5101		100A - Light duty spool rack (Alberta only)
	MM201		200A - Heavy duty spool rack
	MM801		400A - Heavy duty spool rack, fits 3" and 4" rigid conduit
	SS401-E		Wall mount spool Rack
5	W62-1		Wedge clamp 2 – 6 ACSR
	W20-1		Wedge clamp 1/0 – 4 ACSR
6	MM390		Drop wire hook bracket
7	MM300		Service mast wire holder
8	MM505N		Roof flange with neoprene collar for 2 1/2" mast
	MM5505N		Roof flange with neoprene collar for 1 1/4" conduit
	MM506N		Neoprene roof flange for 2 1/2" mast
	MM806NN-1P		Neoprene roof flange, for 4" rigid conduit
9	MM250		1/2" "U" for 2 1/2" mast
10	MM251		Mast strap c/w two 3/8" x 4" lag screws
	MM252		Mast strap without lag screws
		E977GC	1 1/4" conduit strap
		E997HC	1 1/2" conduit strap
		E977JC-4-HD	2" conduit strap
		E977K	2 1/2" conduit strap
		E977L	3" conduit strap
		E977N	4" conduit strap
11	MM400		Mast clamp with 5/8" x 10" threaded bolt and 4" x 4" square washer
	MM401		2 1/2" mast clamp without hardware
	MM445		2 1/2" mast clamp with 5/8" x 4 1/2" threaded bolt and 4" x 4" washer
	MM5400		2 1/2" mast clamp with 1/2" x 10" threaded bolt and 4" x 4" washer

Ref. No.	Steel	PVC	Description
12	MM600		2 1/2" mast clamp with 5 1/2" spacer, 5/8" x 4 1/2" threaded bolt and 4" x 4" washer
	MM602		Masonry 5 1/2" spacer without hardware
	MM602LD		Masonry 5 1/2" light duty spacer without hardware
	MM603		Mast clamp and masonry 5 1/2" spacer without hardware
13	MM8		8 ft. x 2-1/2" O.D. mast
	MM9CM		9 ft. x 2-1/2" O.D. mast
	MM10		10 ft. x 2-1/2" O.D. mast
		49009CC	10ft x 1 1/4" Conduit
		49010CC	10ft x 1 1/2" Conduit
		49011CC	10 ft. x 2" Conduit
		49012CC	10 ft. x 2 1/2" Conduit
		49013CC	10 ft x 3" Conduit
		49015CC	10ft x 4" Conduit
	MM12		12 ft. x 2 1/2" O.D. mast
14	MM140		1 1/4" Female reducer
	MM140M		1 1/4" Male reducer
	MM150		1 1/2" Female reducer
	MM150M		1 1/2" Male reducer
	MM200M		2" Male Reducer
	MM200		2" Female reducer
	MM200P		2" Female reducer for old style 2-3/4" service masts
		E942J	2" Female adaptor
		E943G	1 1/4" Male terminal adaptor
		E943H	1 1/2" Male terminal adaptor
15	MC250		2-1/2" One-piece mast coupler
		E940J	2" Conduit coupler
		E940K	2 1/2" Conduit coupler
		E995G	1 1/4" Offset
16		E991J	2" Meter hub
	MH200		2 1/2" Mast hub with set screw
	MH12X		1 1/4" Rigid conduit threaded hub
		E991G	1 1/4" Conduit hub
	MH15		1 1/2" Rigid conduit threaded mast hub
		E991H	1 1/2" Conduit hub
	MH20		2" Rigid conduit threaded hub
	MH30	E991L	3" Conduit hub
	MH40		4" Rigid conduit threaded hub
17	MM605		Meter socket mounting bracket
18	MM604		Masonry meter socket 4 7/8" spacer bracket

*See page C12 of the commercial grade fittings for the complete list of service entrance cable fittings or follow the link. Click here

Service Masts

Guy kits for 2½ in. masts

Cat. no.	Qty.	Consists of	Description
¼ in. Guy kit			
MM914	1	MM380	Mast guy attachment
	2	GT516	Guy thimbles
	1	GE14	Guy end
	1	GW14110	20 ft. of ¼ in. guy wire
	1	GC902	Guy clamp
	1	RB404	Roof bracket
	1	T404-CM	Lag screw
5⁄16 in. Guy kit			
MM9516	1	MM380	Mast guy attachment
	1	GT516	Guy thimble
	1	GE516	Guy end
	1	GW516110	20 ft. of 5⁄16 in. guy wire
	1	GC902	Guy clamp
	1	BTE512	⅝ in. x 12 in. Bent thimble eye bolt
	1	RA725	Round washer

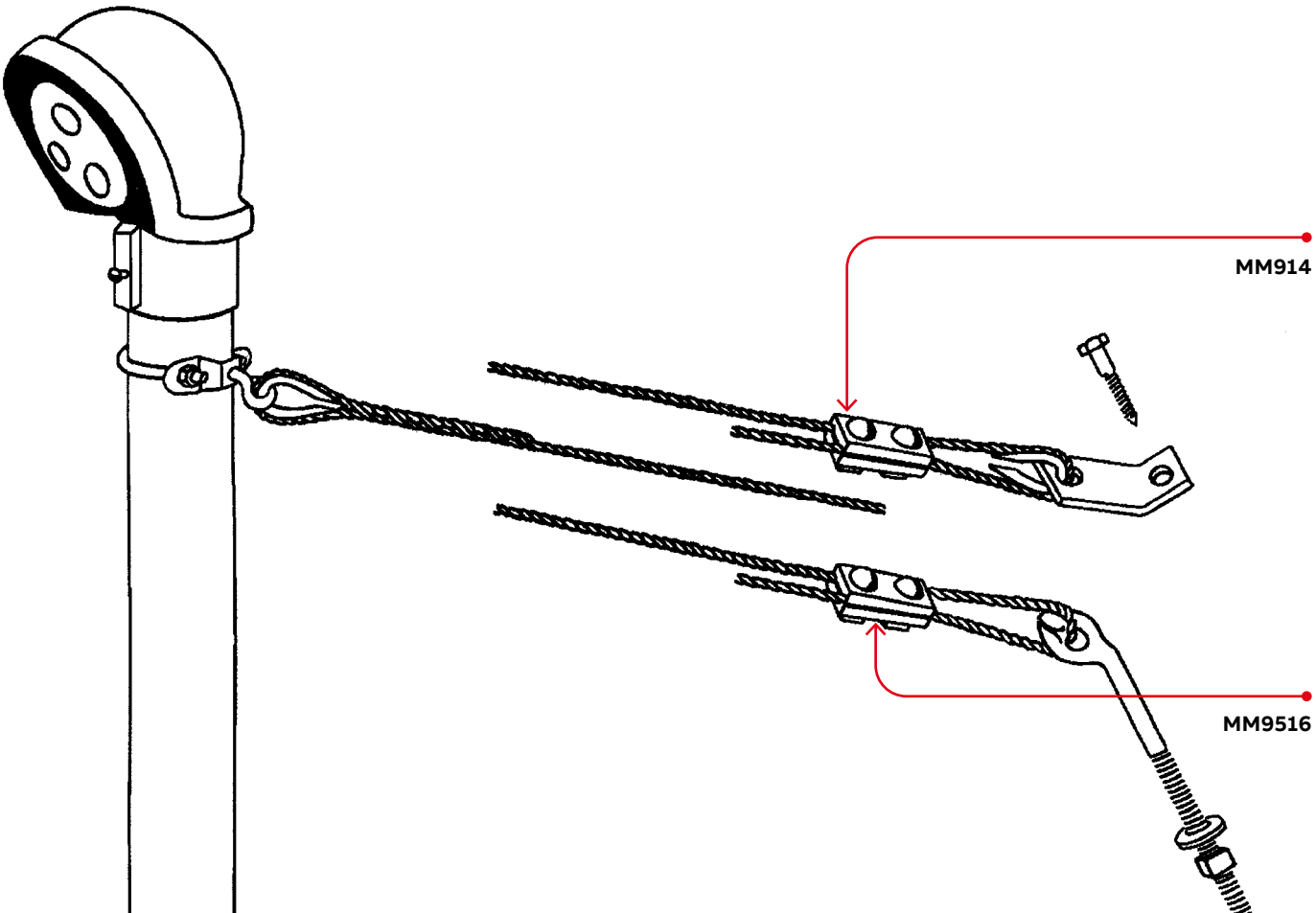

Service masts

Mast kits suitable for British Columbia

Cat. No.	Qty.	Consists of	Description
KIT-100BCMH	1	MM104	Entrance cap
	1	MM101	Light-duty rack
	1	MM505N	Flange comes with neoprene collar
	3	MM250	“U” bolt clamp
	1	MH200	Mast coupler
KIT-100BCMN	1	MM104	Entrance cap
	1	MM101	Light-duty rack
	1	MM505N	Flange comes with neoprene collar
	3	MM250	“U” bolt clamp
	1	MM140	1¼ In. Female reducer
MMK1-NMH	1	MM104	Entrance cap
	1	MM101	Light-duty rack
	1	MM505N	Flange comes with neoprene collar
	3	MM400	Support clamp
	1	MH200	Mast coupler
KIT-200BCMH	1	MM202	Entrance cap
	1	MM201	Heavy-duty rack
	1	MM505N	Flange comes with neoprene collar
	3	MM250	“U” bolt clamp
	1	MH200	Mast coupler
MMK2-NMH	1	MM202	Entrance cap
	1	MM201	Heavy-duty rack
	1	MM505N	Flange comes with neoprene collar
	3	MM400	Support clamp
	1	MH200	Mast coupler

Service masts

Mast kits suitable for Alberta

KIT-1 1/4 – 100 A

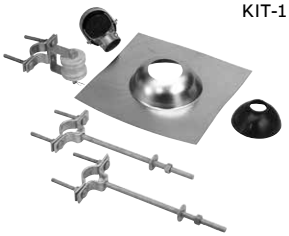

Cat. no.	Qty.	Consists of	Description
This mast kit is used in conjunction with 1¼ in. rigid conduit			
KIT-1 1/4	1	MM5104A	1¼ in. Throat entrance cap
	1	MM5101	Light-duty spool rack
	1	MM5505N	Roof flange complete with neoprene collar
	1	MM5400	Support clamp complete with ½ in. x 10 in. bolt

KIT2-CM – 100 A

Cat. no.	Qty.	Consists of	Description
This mast kit is used in conjunction with 2 in. rigid conduit			
KIT2-CM	1	CIEFSA-2	2 in. Throat entrance cap
	1	MM5101	Light-duty spool rack
	1	MM505N	Roof flange complete with neoprene collar
	2	MM5400	Support clamp complete with ½ in. x 10 in. bolt
	1	MM5140	1¼ in. Bottom female reducer

KIT-2-AL – 200 A

Cat. no.	Qty.	Consists of	Description
KIT-2-AL	1	MM202	Entrance cap
	1	MM5101	Light-duty spool rack
	1	MM505N	Roof flange complete with neoprene collar
	2	MM5400	Support clamp complete with ½ in. x 10 in. bolt
	1	MM200M	2 in. Reducer

MB-110 – 100 A

Cat. no.	Qty.	Consists of	Description
MB-110	1	MM104	1¼ in. Entrance cap
	1	MM201	Heavy-duty spool rack
	1	MM505N	Roof flange complete with neoprene collar
	3	MM400	Support clamp complete with ⅝ in. x 10 in. fully threaded bolt and 4 x 4 washer
	1	MM140	1¼ in. Female reducer

Service masts

Mast kits suitable for Manitoba and Saskatchewan

Cat. no.	Qty.	Consists of	Description
KIT-100MJ	1	MM104	Entrance cap
	1	MM140M	1¼ in. Reducer
	1	MM101	Light-duty rack
	1	MM505N	Flange complete with neoprene collar
	2	MM251	Strap complete with ⅜ in. x 4 in. Lag bolt
	1	MM400	Support clamp
KIT-100MN	1	MM104	Entrance cap
	1	MM140M	1¼ in. Reducer
	1	MM101	Light-duty rack
	1	MM505N	Flange complete with neoprene collar
	3	MM255	Strap complete with ⅜ in. x 5 in. lag bolt
KIT-100MH	1	MM104	Entrance cap
	1	MM101	Light-duty rack
	1	MM505N	Flange complete with neoprene collar
	3	MM251	Strap complete with ⅜ in. x 4 in. lag bolt
	1	MH200	Mast coupler
KIT-200AM	1	MM202	Entrance cap
	1	MM201	Heavy-duty rack
	1	MM200M	2 in. Male reducer
	1	MM505N	Flange complete with neoprene collar
	3	MM255	Strap complete with ⅜ in. x 5 in. lag bolt
KIT-200MH	1	MM202	Entrance cap
	1	MM201	Heavy-duty rack
	1	MM505N	Flange complete with neoprene collar
	3	MM255	Strap complete with ⅜ in. x 5 in. lag bolt
	1	MH200	Mast coupler
KIT-200MJ	1	MM202	Entrance cap
	1	MM200M	2 in. Male reducer
	1	MM201	Heavy-duty rack
	1	MM505N	Flange complete with neoprene collar
	1	MM251	Strap complete with ⅜ in. x 4 in. lag bolt
	1	MM400	Support clamp
MMK2-NMH	1	MM202	Entrance cap
	1	MM201	Heavy-duty rack
	1	MM505N	Flange complete with neoprene collar
	3	MM400	Support clamp
	1	MH200	Mast coupler

Service masts

Mast kits suitable for Ontario

Cat. no.	Qty.	Consists of	Description
KIT-100HDM	1	MM104	Entrance cap
	1	MM140M	1¼ in. Male reducer
	1	MM201	Heavy-duty rack
	1	MM503	Flange complete with steel collar
	3	MM255	Strap complete with ⅜ in. x 5 in. lag bolts
KIT-100MH	1	MM104	Entrance cap
	1	MM101	Light-duty rack
	1	MM505N	Flange complete with neoprene collar
	3	MM251	Strap complete with ⅜ in. x 4 in. lag bolt
	1	MM200	Female reducer
KIT-100MN	1	MM104	Entrance cap
	1	MM140M	1¼ in. Male reducer
	1	MM101	Light-duty rack
	1	MM505N	Flange complete with neoprene collar
	3	MM255	Strap complete with ⅜ in. x 5 in. lag bolt
KIT-100NMH	1	MM104	Entrance cap
	1	MM101	Light-duty rack
	1	MM505N	Flange complete with neoprene collar
	1	MM400	Support clamp
	1	MM200	Female reducer
MMK1	1	MM104	Entrance cap
	1	MM101	Light-duty rack
	1	MM140M	1¼ in. Male reducer
	1	MM503	Flange complete with steel collar
	3	MM400	Support clamp
MMK-1N	1	MM104	Entrance cap
	1	MM101	Light-duty rack
	1	MM505N	Flange complete with neoprene collar
	3	MM400	Support clamp
	1	MM140M	1¼ in. Male reducer
MMK1-NMH	1	MM104	Entrance cap
	1	MM101	Light-duty rack
	1	MM505N	Flange complete with neoprene collar
	3	MM400	Support clamp
	1	MH200	Mast coupler
KIT-200MH	1	MM202	Entrance cap
	1	MM201	Heavy-duty rack
	1	MM200M	2 in. Male reducer
	1	MM505N	Flange complete with neoprene collar
	3	MM255	Strap complete with ⅜ in. x 5 in. lag bolt

Cat. no.	Qty.	Consists of	Description
KIT-200AM	1	MM202	Entrance cap
	1	MM201	Heavy-duty rack
	1	MM505N	Flange complete with neoprene collar
	3	MM255	Strap complete with ⅜ in. x 5 in. lag bolt
	1	MH200	Mast coupler
KIT-200NMH	1	MM202	Entrance cap
	1	MM201	Heavy-duty rack
	1	MM505N	Flange complete with neoprene collar
	3	MM400	Support clamp
	1	MM200	Female reducer
MMK2	1	MM202	Entrance cap
	1	MM201	Heavy-duty rack
	1	MM200M	2 in. Male reducer
	1	MM503	Flange complete with steel collar
	3	MM400	Support clamp
MMK-2N	1	MM202	Entrance cap
	1	MM201	Heavy-duty rack
	1	MM505N	Flange complete with neoprene collar
	3	MM400	Support clamp
	1	MM200M	2 in. Male reducer
MMK2-NMH	1	MM202	Entrance cap
	1	MM201	Heavy-duty rack
	1	MM505N	Flange complete with neoprene collar
	3	MM400	Support clamp
	1	MH200	Mast coupler

Service masts

Mast kits suitable for Quebec

Cat. no.	Qty.	Consists of	Description
KIT-100MN	1	MM104	Entrance cap
	1	MM140M	1¼ in. Male reducer
	1	MM101	Light-duty rack
	1	MM505N	Flange complete with neoprene collar
	3	MM255	Strap complete with ⅜ in. x 5 in. lag bolts
KIT-100MH	1	MM104	Entrance cap
	1	MM101	Light-duty rack
	1	MM505N	Flange complete with neoprene collar
	3	MM251	Strap complete with ⅜ in. x 4 in. lag bolts
	1	MH200	Mast coupler
KIT-100MNF	1	MM104	Entrance cap
	1	MM140M	1¼ in. Male reducer
	1	MM101	Light-duty rack
	3	MM251	Strap complete with ⅜ in. x 4 in. lag bolts
KIT-200AM	1	MM202	Entrance cap
	1	MM201	Heavy-duty rack
	1	MM200M	2 in. Male reducer
	1	MM505N	Flange complete with neoprene collar
	3	MM255	Strap complete with ⅜ in. x 5 in. lag bolts
KIT-200AMGR	1	MM202	Entrance cap
	1	MM201	Heavy-duty rack
	1	MM200M	2 in. Male reducer
	1	MM505N	Flange complete with neoprene collar
	3	MM255	Strap complete with ⅜ in. x 5 in. lag bolts
	1	MM700	Service mast ground clamp
KIT-200MH	1	MM202	Entrance cap
	1	MM201	Heavy-duty rack
	1	MM505N	Flange complete with neoprene collar
	3	MM255	Strap complete with ⅜ in. x 5 in. lag bolts
	1	MH200	Mast coupler

Cat. no.	Qty.	Consists of	Description
KIT-100HDM	1	MM104	Entrance cap
	1	MM140M	1¼ in. Male reducer
	1	MM201	Heavy-duty rack
	1	MM503	Flange complete with steel collar
	3	MM255	Strap complete with ⅜ in. x 5 in. lag bolts
KIT-200-PVC	1	SS401-E	Spool rack
	1	E998J	2 in. Entrance cap
	3	E977JC	2 in. Strap
	1	PH20	2 in. Hub PVC
	2	E943J	2 In. Male adaptor
	2	CI1716	2 in. Locknut
	1	E986J	2 in. LB type
	1	CIDUCT1	Duct seal
	1	UA9AJCB-UPC	2 in. PVC elbow
KIT-200AM-CP	1	MM202	2 in. Entrance cap
	1	MM201	Spool rack
	1	MM505N	Floor flange
	1	MM200M	2 in. Male reducer
	3	MM251	Strap complete with ⅜ in. x 4 in. lag bolts
	2	E943J	2 in. Male adaptor
	2	CI1716	2 in. Locknut
	1	E986J	2 in. Entrance cap
	1	DUCT SEAL	Duct seal
	1	UA9AJCB-UPC	2 in. PVC elbow
KIT-200MH-CP	1	MM202	2 in. Entrance cap
	1	MM201	Spool rack
	1	MM505N	Roof flange
	1	MH200	2 in. Mast coupler
	3	MM251	Strap complete with ⅜ in. x 4 in. lag bolts
	2	E943J	2 in. Male adaptor
	2	CI1716	2 in. Locknut
	1	E986J	2 in. Entrance cap
	1	CIDUCT1	Duct seal
	1	UA9AJCB-UPC	2 in. PVC elbow

Service masts

Mast kits suitable for Quebec and for all regions

KIT-200-PVC – Quebec

	Cat. no.	Qty.	Consists of	Description
	This mast kit is used in conjunction with 2 in. rigid conduit			
	KIT-200-PVC	1	SS401-E	Spool rack
		1	E998J	2 in. Entrance cap
		3	E977JCIM	2 in. Strap
		1	PH20	2 in. Hub PVC
		2	E943J	2 in. Male adaptor
		2	CI1716	2 in. Locknut
		1	E986J	2 in. LB type
		1	CIDUCT1	Duct seal
		1	UA9AJCB-UPC	2 in. PVC elbow

KIT-200AM-CP – Quebec

	Cat. no.	Qty.	Consists of	Description
	This mast kit is used in conjunction with 2 in. rigid conduit			
	KIT-200AM-CP	1	MM202	2 in. Entrance cap
		1	MM201	Spool rack
		1	MM505N	Roof flange
		1	MM200M	2 in. Male reducer
		3	MM251	2 in. Pipe strap (comes with lag screws)
		2	E943J	2 in. Male adaptor
		2	CI1716	2 in. Locknut
		1	E986J	2 in. Entrance cap
		1	CIDUCT1	Duct seal
		1	UA9AJCB-UPC	2 in. PVC elbow

KIT-200MH-CP – Quebec

	Cat. no.	Qty.	Consists of	Description
	KIT-200MH-CP	1	MM202	2 in. Entrance cap
		1	MM201	Spool rack
		1	MM505N	Roof flange
		1	MH200	2 in. Mast coupler
		3	MM251	2 in. Pipe strap, comes with lag screws ⅜ x 4 in.
		2	E943J	2 in. Male adaptor
		2	CI1716	2 in. Locknut
		1	E986J	2 in. Entrance cap
		1	CIDUCT1	Duct seal
		1	UA9AJCB-UPC	2 in. PVC elbow

KIT-400MH – For all regions

	Cat. no.	Qty.	Consists of	Description
	This mast kit is used in conjunction with 4 in. rigid conduit			
	KIT-400MH	1	CIEFA-4	4 in. Entrance head
		1	MM801	Heavy-duty spool rack
		1	MM806N-1P	Roof flange
		1	MH40	4 in. Mast coupler
		3	CI1532	Pipe strap comes with lag screws (6) ⅜ x 5 in.

Service masts

Mast kits suitable for New Brunswick and Newfoundland

New Brunswick

Cat. no.	Qty.	Consists of	Description
KIT-100	1	MM104	Entrance cap
	1	MM140M	1¼ in. Male reducer
	3	MM251	Strap complete with ⅜ in. x 4 in. lag bolts
	1	MM505N	Flange complete with neoprene collar
KIT-100NBMH	1	MM104	Entrance cap
	3	MM251	Strap complete with ⅜ in. x 4 in. lag bolts
	1	MH200	Mast coupler
	1	MM505N	Flange complete with neoprene collar
KIT-200	1	MM202	Entrance cap
	1	MM200M	2 in. Male reducer
	3	MM251	Strap complete with ⅜ in. x 4 in. lag bolts
	1	MM505N	Flange complete with neoprene collar
KIT-200MH	1	MM202	Entrance cap
	1	MM201	Heavy-duty spool rack
	1	MH200	Mast coupler
	3	MM255	Strap complete with ⅜ in. x 5 in. lag bolts
	1	MM505N	Flange complete with neoprene collar
KIT-206NBMH	1	MM202	Entrance cap
	1	MH200	Mast coupler
	3	MM251	Strap complete with ⅜ in. x 4 in. lag bolts
	1	MM506N	All-neoprene roof flange
KIT-200NBMH	1	MM202	Entrance cap
	1	MH200	Mast coupler
	3	MM251	Strap complete with ⅜ in. x 4 in. lag bolts
	1	MM505N	Flange complete with neoprene collar
KIT-106NBMH	1	MM104	Entrance cap
	1	MM506N	All neoprene roof flange
	3	MM251	Strap complete with ⅜ in. x 4 in. lag bolts
	1	MH200	Mast coupler

Newfoundland

Cat. no.	Qty.	Consists of	Description
KIT-100MH	1	MH200	Mast coupler
	1	MM104	Entrance cap
	1	MM101	Light-duty spool rack
	3	MM251	Strap complete with ⅜ in. x 4 in. lag bolts
	1	MM505N	Flange complete with neoprene collar
KIT-100NBMH	1	MM104	Entrance cap
	3	MM251	Strap complete with ⅜ in. x 4 in. lag bolts
	1	MH200	Mast coupler
	1	MM505N	Flange complete with neoprene collar
KIT-205LDMH	1	MM202	Entrance cap
	1	MM101	Light-duty spool rack
	3	MM251	Strap complete with ⅜ in. x 4 in. lag bolts
	1	MH200	Mast coupler
	1	MM505N	Flange complete with neoprene collar

Service masts

Mast kits suitable for Nova Scotia and Prince Edward Island

Nova Scotia

Cat. no.	Qty.	Consists of	Description
KIT-100MN	1	MM104	Entrance cap
	1	MM140M	1¼ in. Male reducer
	1	MM101	Light-duty spool rack
	3	MM255	Strap complete with ⅜ in. x 5 in. lag bolts
	1	MM505N	Flange complete with neoprene collar
KIT-100	1	MM104	Entrance cap
	1	MM140M	1¼ in. Male reducer
	3	MM251	Strap complete with ⅜ in. x 4 in. lag bolts
	1	MM505N	Flange complete with neoprene collar
KIT-100NSMH	1	MM104	Entrance cap
	4	MM251	Strap complete with ⅜ in. x 4 in. lag bolts
	1	MM505N	Flange complete with neoprene collar
	1	MH200	Mast coupler
KIT-200AM	1	MM202	Entrance cap
	1	MM201	Heavy-duty spool rack
	3	MM255	Strap complete with ⅜ in. x 5 in. lag bolts
	1	MM200M	2 in. Male reducer
	1	MM505N	Flange complete with neoprene collar
KIT-200	1	MM202	Entrance cap
	1	MM200M	2 in. Male reducer
	3	MM251	Strap complete with ⅜ in. x 4 in. lag bolts
	1	MM505N	Flange complete with neoprene collar
KIT-200NSMH	1	MM202	Entrance cap
	1	MH200	Mast coupler
	3	MM251	Strap complete with ⅜ in. x 4 in. lag bolts
	1	MM505N	Flange complete with neoprene collar

Prince Edward Island

Cat. no.	Qty.	Consists of	Description
KIT-100MH	1	MM104	Entrance cap
	1	MM101	Light-duty spool rack
	3	MM251	Strap complete with ⅜ in. x 4 in. lag bolts
	1	MM505N	Flange complete with neoprene collar
	1	MH200	Mast coupler
KIT-106NBMH	1	MM104	Entrance cap
	3	MM251	Strap complete with ⅜ in. x 4 in. lag bolts
	1	MH200	Mast coupler
	1	MM506N	All-neoprene roof flange
KIT-200MH	1	MM202	Entrance cap
	1	MM201	Heavy-duty spool rack
	1	MH200	Mast coupler
	3	MM255	Strap complete with ⅜ in. x 5 in. lag bolts
	1	MM505N	Flange complete with neoprene collar
KIT-200NBMH	1	MM202	Entrance cap
	1	MH200	Mast coupler
	3	MM251	Strap complete with ⅜ in. x 4 in. lag bolts
	1	MM505N	Flange complete with neoprene collar
KIT-206NBMH	1	MM202	Entrance cap
	1	MH200	Mast coupler
	3	MM251	Strap complete with ⅜ in. x 4 in. lag bolts
	1	MM506N	All-neoprene roof flange

Pole line hardware

Heavy-duty spool rack (200 A)

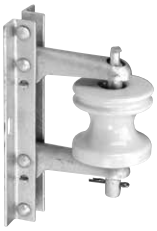

Cat. no.	No. of wires	Overall length (in.)	Weight (100 pcs) lb	Weight (100 pcs) kg	Std. pkg.
SS401E	1	9½	300	136.3	10
SS802E	2	17½	520	236.3	5
SS803E	3	25½	780	354.5	5
SS804E	4	33½	1,040	472.7	5

Racks are made of 1 in. x 1 in. x ⅛ in. angle iron, assembled complete with ⅝ in. diameter rod and 3/16 in. diameter brass cotter pin. All ferrous parts are hot dip galvanized. Insulator cat. no. IB135 must be ordered separately (included in SS401E only).

Heavy-duty spool rack (400 A)

Cat. no.	No. of wires	Overall length (in.)	Weight (100 pcs) lb	Weight (100 pcs) kg	Std. pkg.
MM801	1	3	360	163.2	10

Fits 3½ in. and 4 in. rigid conduit.

Medium-duty spool rack (100 A)

Cat. no.	No. of wires	Overall dia. (in.)	Weight (100 pcs) lb	Weight (100 pcs) kg	Std. pkg.
SS18	1	6½	150	68.1	25

Medium-duty spool rack is furnished complete with cat. no. IB134 insulator. All ferrous parts are hot dip galvanized.

Pole line hardware

Tripods (200 A)

Cat. no.	No. of wires	Weight (100 pcs) lb	Weight (100 pcs) kg	Std. pkg.
603TH*	3	4,000	1818.1	1

Diagram

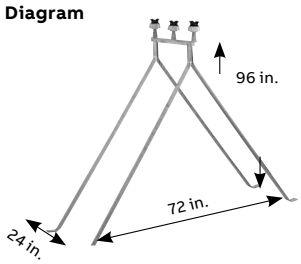

Type "T" (medium duty) is constructed of 1 in. x 1 in. x ⅛ in. angle iron. Type "TH" (heavy duty) is constructed of 1¼ in. x 1¼ in. x 3/16 in. angle iron. All ferrous parts are hot dip galvanized. * Complete with IB400.

Tripod insulator (200 A)

	Cat. no.	Height (in.)	Overall dia. (in.)	Weight (100 pcs) lb	Weight (100 pcs) kg	Std. pkg.
	IB400	3½	3¼	125	56.8	25

Insulators (100–400 A)

	Cat. no.	Ampere	Height (in.)	Diameter (in.)	Hole dia. (in.)	Weight (100 pcs) lb	Weight (100 pcs) kg	Std. pkg.
	IB134	100	2	2¼	9/16	40	18.1	100
	IB135	200 and 400	3	3	13/16	115	52.2	50

Porcelain insulator securely held in the hot galvanized steel clevis by a cotter pin.

Screw type insulator (100 A)

	Cat. no.	Insulator length (in.)	Pull out strength	Weight (100 pcs) lb	Weight (100 pcs) kg	Std. pkg.
	IB900	3	1,500 lb	87	39.5	25

Porcelain insulator securely held in the hot galvanized steel clevis by a cotter pin.

Light-duty clevis (100 A)

	Cat. no.	Mounting hole	Weight (100 pcs) lb	Weight (100 pcs) kg	Std. pkg.
	AN422	11/16 in. Round	90	40.9	25
	AN422KIT	11/16 in. Round with bolts and washers	–	–	1
	AN423	9/16 in. x 9/16 in. square	90	40.9	25

Diagram

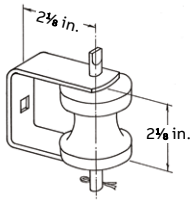

Add suffix "NI" if insulator is not required. Constructed of ⅛ in. x 1 in. flat mild steel, has ⅜ in. diam. pin and C/W No. IB134 insulator, mounting hole as per table above. All ferrous parts are hot dip galvanized.

Clevis (200 A)

	Cat. no.	Weight (100 pcs) lb	Weight (100 pcs) kg	Std. pkg.
	AN424	100	45.4	25

Diagram

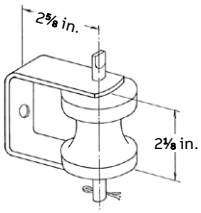

Add suffix "NI" if insulator is not required. Constructed of ⅛ in. x 1¼ in. flat mild steel, has ⅜ in. diam. pin and complete with catalog no. IB134 insulator, ⅜ in. round mounting hole. All ferrous parts are hot dip galvanized.

Pole line hardware

Heavy-duty clevis (200 A)

	Cat. no.	Weight (100 pcs) lb	Weight (100 pcs) kg	Std. pkg.
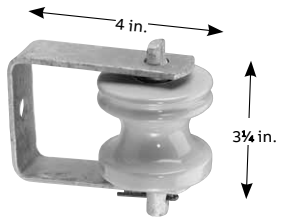	AN428S	262	119	25

Add suffix "NI" if insulator is not required. Constructed of 3/16 in. x 1½ in. flat mild steel, has ⅝ in. diam. pin and complete with catalog no. IB135 insulator, 11/16 in. round mounting hole. All ferrous parts are hot dip galvanized.

Heavy-duty clevis (200 A)

	Cat. no.	Weight (100 pcs) lb	Weight (100 pcs) kg	Std. pkg.
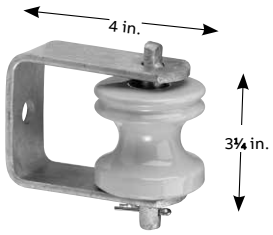	AN428	350	159	5

Add suffix "NI" if insulator is not required. Constructed of ¼ in. x 2 in. flat mild steel, has ⅝ in. diam. pin and complete with catalog no. IB135 insulator, 11/16 in. round mounting hole. All ferrous parts are hot dip galvanized.

Heavy-duty flat mount triplex cable rack (200 A)

	Cat. no.	Weight (100 pcs) lb	Weight (100 pcs) kg	Std. pkg.
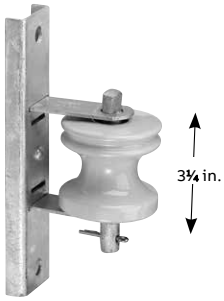	AN117	290	130	10

Heavy-duty wall rack constructed of ⅛ in. steel, with 2 mounting holes ½ in., complete with catalog no. IB135 insulator. All ferrous parts are hot dip galvanized.

Light-duty flat mount triplex cable rack (100 A)

	Cat. no.	Weight (100 pcs) lb	Weight (100 pcs) kg	Std. pkg.
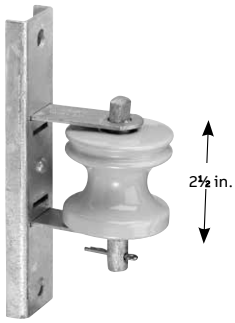	AN122	160	70	10

Light-duty wall rack constructed of ⅛ in. steel, with 2 mounting holes ½ in., complete with catalog no. IB134 insulator. All ferrous parts are hot dip galvanized.

Pole line hardware

Clevis (100 A)

Cat. no.	Weight (100 pcs) lb	Weight (100 pcs) kg	Std. pkg.
AL425	162	73.6	20

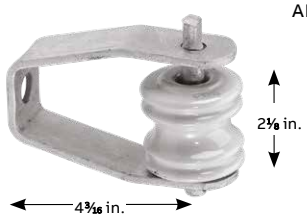

Diagram

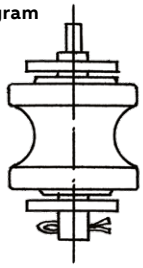

Add suffix "NI" if insulator is not required. Constructed of ³⁄₁₆ in. x 1½ in. flat mild steel, has ½ in. diam. pin and comes with catalog no. IB134 insulator, ¹¹⁄₁₆ in. round mounting hole. All ferrous parts are hot dip galvanized.

Clevis (200 A)

Cat. no.	Weight (100 pcs) lb	Weight (100 pcs) kg	Std. pkg.
AU427	265	120.4	10

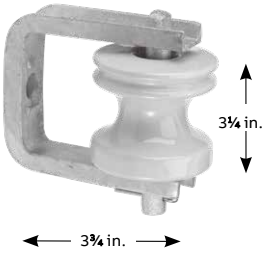

Diagram

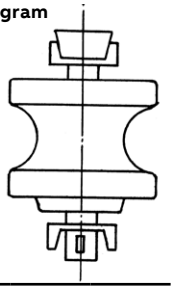

Add suffix "NI" if insulator is not required. Constructed of 1¼ in. x ½ in. x ⅛ in. steel channel, has ⅝ in. diam. pin and comes with catalog no. IB135 insulator, ¹¹⁄₁₆ in. round mounting hole. All ferrous parts are hot dip galvanized.

Clevis (200 A)

Cat. no.	Weight (100 pcs) lb	Weight (100 pcs) kg	Std. pkg.
AL426	262	119	10

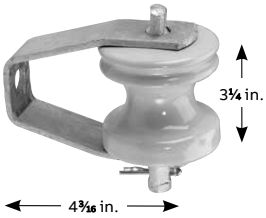

Diagram

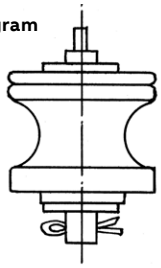

Add suffix "NI" if insulator is not required. Constructed of ³⁄₁₆ in. x 1½ in. flat mild steel, has ⅝ in. diam. pin and ccomes with catalog no. IB135 insulator, ¹¹⁄₁₆ in. round mounting hole. All ferrous parts are hot dip galvanized.

Clevis (200 A)

Cat. no.	Weight (100 pcs) lb	Weight (100 pcs) kg	Std. pkg.
AU429	240	109	10

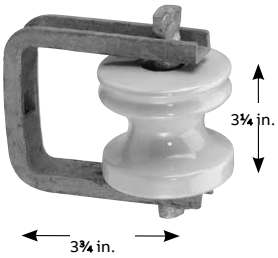

Diagram

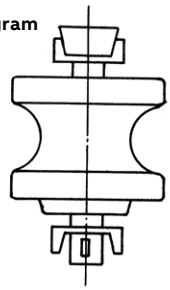

Add suffix "NI" if insulator is not required. Constructed of 1 in. x ½ in. x ⅛ in. steel channel, has ⅝ in. diam. pin comes with catalog no. IB135 insulator, ¹¹⁄₁₆ in. square hole. All ferrous parts are hot dip galvanized.

Pole line hardware

Clevis (100 A)

Cat. no.	Weight (100 pcs) lb	Weight (100 pcs) kg	Std. pkg.
SW409	100	45.4	25

Add suffix "NI" if insulator is not required. Constructed of ⅛ in. x 1 in. curved mild steel, has ⅜ in. diam. swivel type pin, comes with catalog no. IB134 insulator, 2 mtg. holes 7/16 in. round. All ferrous parts are hot dip galvanized.

Clevis (100 A)

Cat. no.	Weight (100 pcs) lb	Weight (100 pcs) kg	Std. pkg.
SW411	125	56.8	20

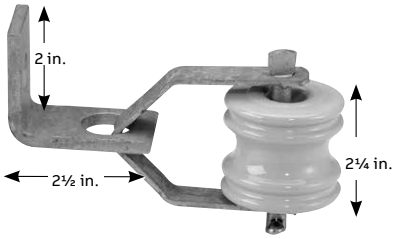

Add suffix "NI" if insulator is not required. Constructed of ⅛ in. x ¾ in. curved mild steel, has ⅜ in. diam. swivel type pin, comes with catalog no. IB134 insulator, strong ¼ in. angle bracket, 11/16 in. round mtg. hole. All ferrous parts are hot dip galvanized.

Clevis (100 A)

Cat. no.	Weight (100 pcs) lb	Weight (100 pcs) kg	Std. pkg.
SW410	180	81.8	20

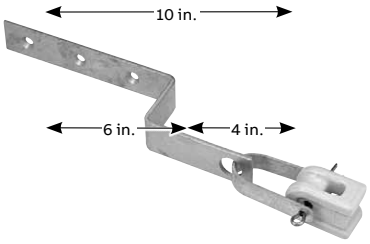

Add suffix "NI" if insulator is not required. Undereave/off the wall bracket constructed of 3/16 in. x 1½ in. flat mild steel, comes with catalog no. IB132 insulator. Three ⅜ in. round mtg. holes. All ferrous parts are hot dip galvanized.

Clevis (100 A)

Cat. no.	Weight (100 pcs) lb	Weight (100 pcs) kg	Std. pkg.
SW411S	125	56.8	20

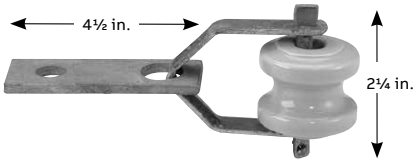

Add suffix "NI" if insulator is not required. Constructed of ⅛ in. x ¾ in. curved mild steel, has ⅜ in. diam. swivel type pin, comes with catalog no. IB134 insulator, strong ¼ in. bracket, 11/16 in. round mtg. hole. All ferrous parts are hot dip galvanized.

Pole line hardware

Clevis (100 A)

Cat. no.	Weight (100 pcs) lb	Weight (100 pcs) kg	Std. pkg.
SW412	100	45.4	10

Add suffix "NI" if insulator is not required. Constructed of 3/16 in. x 1½ in. steel, comes with catalog no. IB134 insulator. Three ⅜ in. round mtg. holes. All ferrous parts are hot dip galvanized.

Clevis (100 A)

Cat. no.	Weight (100 pcs) lb	Weight (100 pcs) kg	Std. pkg.
SW412-MH	140	63.5	20

Add suffix "NI" if insulator is not required. Constructed of 3/16 in. x 1½ in. steel, has ⅝ in. diam. pin and comes with catalog no. IB134 insulator. 11/16 in. round mtg. hole. All ferrous parts are hot dip galvanized.

Anti-vibration kit for spool rack

Cat. no.	Description	Weight (100 pcs) lb	Weight (100 pcs) kg	Std. pkg.
B3/8-6	2 bolts ⅜ x 6 in. long, complete with 1 washer, 1 lockwasher and 1 nut finished hot galv.	100	45.35	5

Add suffix "NI" if insulator is not required. Constructed of 1¼ in. x ½ in. x ⅛ in. steel channel, has ⅝ in. diam. pin and comes with catalog no. IB135 insulator, 11/16 in. round mounting hole. All ferrous parts are hot dip galvanized.

Québec Construction Code, Chapter V – Electricity, Article 6-112 (6) requires that the spool rack be tightly bolted and attached to structural members of a minimum thickness of 88 mm overall, if the framed structure is made of wood.

Hydro-Québec, Low-Voltage Electrical Service, Standard E21-10, Article 2.2.1, 2.2.2 and Blue Book read as follows:

2.2.1 Supply and installation
The master electrician shall, at the customer's expense, supply and install the spool rack in accordance with Code requirements and with the recommendations of the Régie du bâtiment du Québec, particularly to avoid any problem due to vibrations. The customer retains ownership of the spool rack.

2.2.2 Location
The spool rack may be attached to the exterior wall of a building or to a customer pole, service mast or other support structure. The master electrician shall ensure that the service loop is secured firmly to the building in a location not conducive to vibrations, and shall strengthen the structure, if necessary, at the customer's expense. The location must also allow the meter to be installed in a readily accessible place.

Diagrams

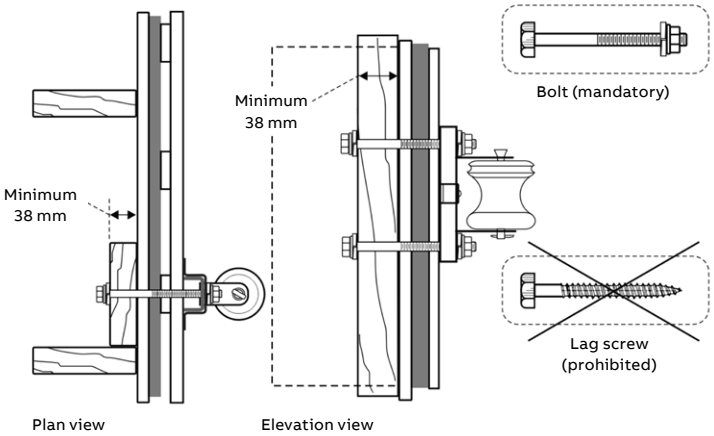

Note: Interior insulation and exterior wall are not shown for more clarity.
Figure 2: Spool rack installation (wooden structure).
Source: Régie du bâtiment du Québec. Can also be used in all provinces.

Pole line hardware

Machine bolts

Cat. no.	F diam. (in.)	G long. (in.)	H min. (in.)	Weight (100 pcs) lb	Weight (100 pcs) kg	Std. pkg.
BM506	⅝	6	1½	70	31.8	50
BM508	⅝	8	4	86	39.0	50
BM510	⅝	10	4	102	46.3	25
BM512	⅝	12	6	115	52.2	25
BM514	⅝	14	6	130	59.0	30
BM516	⅝	16	6	145	65.9	30
BM518	⅝	18	6	160	72.7	25
BM520	⅝	20	6	175	79.5	30

Diagrams

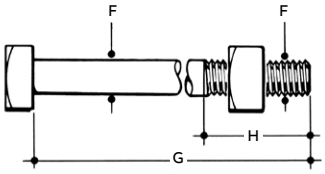

Lag screws

Cat. no.	F diam. (in.)	G long. (in.)	Weight (100 pcs) lb	Weight (100 pcs) kg	Std. pkg.
T102L	¼	2½	3	1.3	100
T103	¼	3	4	1.8	100
T203	5/16	3	6	2.7	100
T302	⅜	2	7	3.1	100
T303	⅜	3	10	4.5	100
T304	⅜	4	11	5.0	50
T305	⅜	5	14	6.3	25
T306	⅜	6	17	7.7	50
T308	⅜	8	22	10.0	50
T310	⅜	10	27	12.2	10
T404-CM	½	4	22	10.0	50
T405	½	5	27	12.2	25
T406	½	6	31	14.0	25
T505	⅝	5	45	20.4	25

Pole line hardware

"U" cable guards and straps

Cat. no.	Width (in.)	Length (ft.)	Size (in.)	Weight (100 pcs) lb	Weight (100 pcs) kg	Std. pkg.
Straight						
UG8114	1¼	8	–	760	345	5
UG8214	2¼	8	–	1,300	590	5
UG8314	3¼	8	–	2,000	909	5
Flared						
UGF8114	1¼	8	–	760	345	5
UGF8214	2¼	8	–	1,300	590	5
UGF8314	3¼	8	–	2,000	909	5
Strap						
SUG114	–	–	1¼	15	6.8	10
SUG214	–	–	2¼	24	11.0	10
SUG314	–	–	3¼	60	27.0	10

Diagram

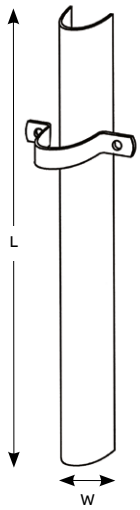

Hot dip galvanized 14 gauge steel. For nonmetallic version (PV-Mold), refer to page D90.

Guy clamps

Cat. no.	Qty.	Bolt size (in.)	Length (in.)	Range (in.)	Weight (100 pcs) lb	Weight (100 pcs) kg	Std. pkg.
GC902	2	½	3¼	¼–7/16	130	59.0	50
GC904	3	½	5⅞	¼–7/16	224	101.3	25
GC906	3	⅝	6	5/16–½	274	124.5	25

Eye nut

Cat. no.	Eye dimensions (in.)	Weight (100 pcs) lb	Weight (100 pcs) kg	Std. pkg.
K58	1 5/16 x 1 11/16	70	31.8	50

Diagrams

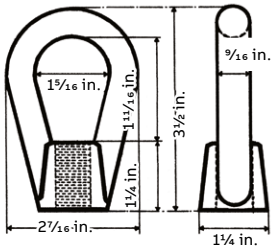

Drop forged, hot galvanized, tapped ⅝ in.

Pole line hardware

Guy hooks

Cat. no.	Bolt size (in.)	Weight (100 pcs) lb	Weight (100 pcs) kg	Std. pkg.
CH912	⅝	90	40.9	50
K133A	⅝–¾	118	53.6	25

CH912: Prevents the guy from slipping down when the pole is guyed at a sharp angle. Made of half oval steel, the round side serving as protection to the strands.
K133A: Iron guy hook for use with **⅝** in. or **¾** in. bolt. Equipped with teeth to imbed in the wood fibres.

Screw anchor

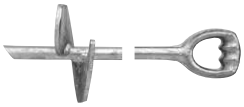

Cat. no.	Rod dia. (in.)	Length (ft.)	Plate dia. (in.)	Weight (100 pcs) lb	Weight (100 pcs) kg	Std. pkg.
TS346	¾	5.6	6	1,050	477.2	2

Installed by placing a rod into the heavy forged oval eye to screw the anchor into the ground.

Anchor rods

Cat. no.	Rod dia. (in.)	Length (ft.)	Type	Weight (100 pcs) lb	Weight (100 pcs) kg	Std. pkg.
AR586	⅝	6	Double thimble	750	340.9	5
AR347	¾	7	Double thimble	1,320	600.0	

Expanding anchor

Cat. no.	Hole size required (in.)	Area (sq. in.)	Rod dia. (in.)	Weight (100 pcs) lb	Weight (100 pcs) kg	Std. pkg.
EA08	8	135	⅝–¾	950	431.8	5
ME-DA4PC2	8	16X16	⅝–¾	1165	528.5	5

These heavy-duty steel anchors have 8 blades that expand to form a square, with equalized load distribution all around the anchor.

Pole line hardware

Oval eye bolt

Cat. no.	Description	F dia. (in.)	G length (in.)	H min. (in.)	Weight (100 pcs) lb	Weight (100 pcs) kg	Std. pkg.
BO506	Oval eye bolt	⅝	6	3	122	55.4	50
BO508	Oval eye bolt	⅝	8	4	136	61.8	25
BO510	Oval eye bolt	⅝	10	4	150	68.1	25
BO512	Oval eye bolt	⅝	12	4	168	76.3	25

Diagram

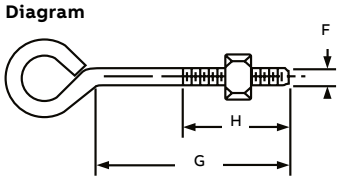

Guy wire guard

	Cat. no.	Colour	Length (ft.)	Weight (100 pcs) lb	Weight (100 pcs) kg	Std. pkg.
	2YG	Yellow	6.7	3.35	1.46	10

Diagrams

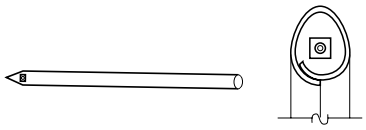

Guy strain insulator

	Cat. no.	Length (ft.)	Dia. (in.)	Weight (100 pcs) lb	Weight (100 pcs) kg	Std. pkg.
	504WGS	4¼	2⅞	1.0	0.45	1
	506WGS	5½	3⅜	1.0	0.45	1

Diagrams

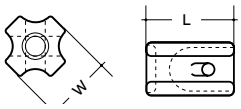

Note: Made of porcelain

Type W – Aluminum service wedge clamps for use with ACSR, aluminum, AAAC conductors

- For dead-ending self-supporting drop wire
- Saves conductor – drop wire may be cut to exact length
- Can be attached to bare neutral at any point in the span
- Adjustments in drop wire sag are easily made
- Grips ACSR, AAAC or aluminum conductors

	Cat. no.	Conductor range (AWG) ACSR	Conductor range (AWG) Al	Conductor range (AWG) AAAC	Dimensions (in.) D	Dimensions (in.) L	Typical tensile values Conductor	Typical tensile values Value (lb)
W-1 Series aluminum wedge and slider	W62-1	2–6	1 str. – 6 sol.	2–6	2⅜ flex.	12, 17½	2 6 x 1 ACSR	1,200
	W62-1FC	2–6	1 str. – 6 sol.	2–6	2⅜ flex.	12, 17½	2 6 x 1 ACSR	1,200
	W20-1	1/0–4	2/0 str. – 2 sol.	1/0–4	2⅜ flex.	12½, 18½	1/0 6 x 1 ACSR	1,800
	W20-1FC	1/0–4	2/0 str. – 2 sol.	1/0–4	2⅜ flex.	12½, 18½	1/0 6 x 1 ACSR	1,800
	W40-1*	4/0–2/0	4/0 str. – 2 sol.	4/0–2/0	2⅜ flex.	12¾, 18½	4/0 6 x 1 ACSR	1,900
	W40-1FC*	4/0–2/0	4/0 str. – 2 sol.	4/0–2/0	2⅜ flex.	12¾, 18½	4/0 6 x 1 ACSR	1,900

"FC" flexible bail (bail length – 11½ in.)

Rigid stainless steel bail (bail length – 6½ in.)

Diagram

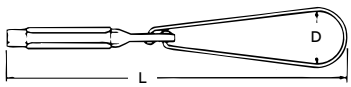

* W40 series clamps rated 850 lb ultimate tension for 1/0 AWG ACSR, Al or AAAC.

EM series EVEMS solutions
Efficient energy management for EV charging

The future is electric. Are you ready?

As electric vehicle (EV) adoption grows, so does the demand on the electrical grid and the need for convenient home charging solutions. Choosing the right technology for EV readiness has never been more important.

The **Microlectric®** products makes it possible with innovative **made in Canada** solutions.

EM series of EVEMS is the perfect solution when upgrades aren't an option due to capacity or budget. It provides a cost-effective, hassle-free path to EV readiness.

EVEMS devices can also be used as EMS devices to manage other residential electrical loads— HVAC, appliances, spa, and more.

What is an EVEMS?

An Electric Vehicle Energy Management System (EVEMS) is designed to optimize energy management during EV charging.

By monitoring the residence's electrical capacity in real-time, an EVEMS ensures that charging only occurs when sufficient capacity is available.

This prevents system overloads, allowing EV owners to safely and efficiently charge their vehicles without exceeding their electrical capacity.

It enables a residence to be EV-ready, while avoiding costly upgrades to the electrical infrastructure when capacity is limited.

EMEV-S Series

Single load EVEMS for 100 A/200 A main entrance

Product specifications

- Choose from two enclosure options: Type 1 for indoor use or Type 3R for indoor and outdoor use
- Compact size that allows for easy installation in tight spaces
- S5 Series models can control one 50 A max EV charger
- S8 Series models can control one 80 A max EV charger
- Real-time current monitoring for service entrances rated up to 100 A or 200 A
- Easy and fast installation
- S5 Series models used in conjunction with H6 Series hubs can be used for multi-unit residential building (MURBs) installations
- Exclusive patented technology for smart monitoring and controlling
- Products evaluated using CSA SPE-1000

EMEV-S51-1

Cat no.	Service entrance to be monitored	EV charger to be controlled	Enclosure type	Operation temperature	Voltage	Frequency	Main lug wire size	Weight lb (kg)
EMEV-S51-0	60-100 A 208, 240 VAC or 120/208 120/240 VAC	16 to 50 A load	Type 3R	-4°F to 104°F (-20°C to 40°C)	208/240 V AC single phase	50 – 60 Hz	14 – 4 AWG (Cu only)	7 (3.2)
EMEV-S51-1			Type 1					
EMEV-S52-0	125-200 A 208, 240 VAC or 120/208 120/240 VAC		Type 3R					
EMEV-S52-1			Type 1					
EMEV-S82-0		Up to 80 A load	Type 3R				14-2 AWG (Cu only)	13 (5.9)

Diagrams
Type 1 Enclosure

Applicable to:
EMEV-S51-1
EMEV-S52-1

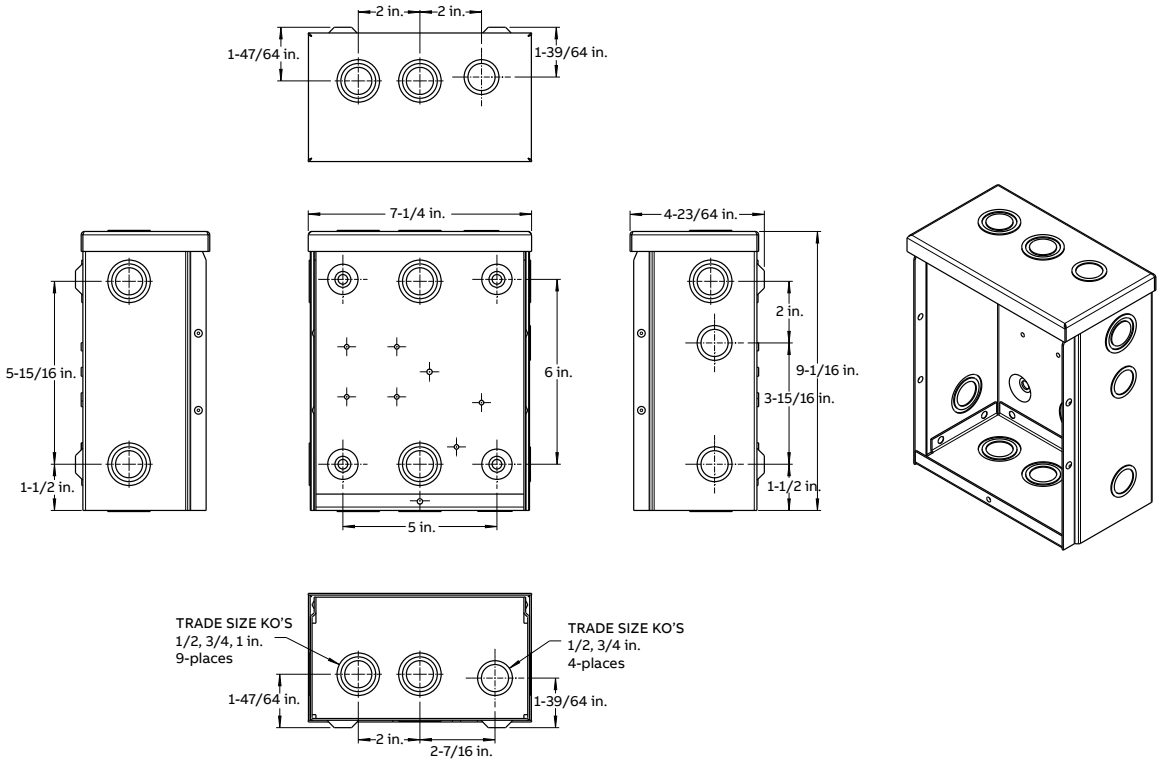

EMEV-S Series

Single load EVEMS for 100 A/200 A main entrance

Diagrams
Type 3R Enclosure

Applicable to:
EMEV-S51-0
EMEV-S52-0

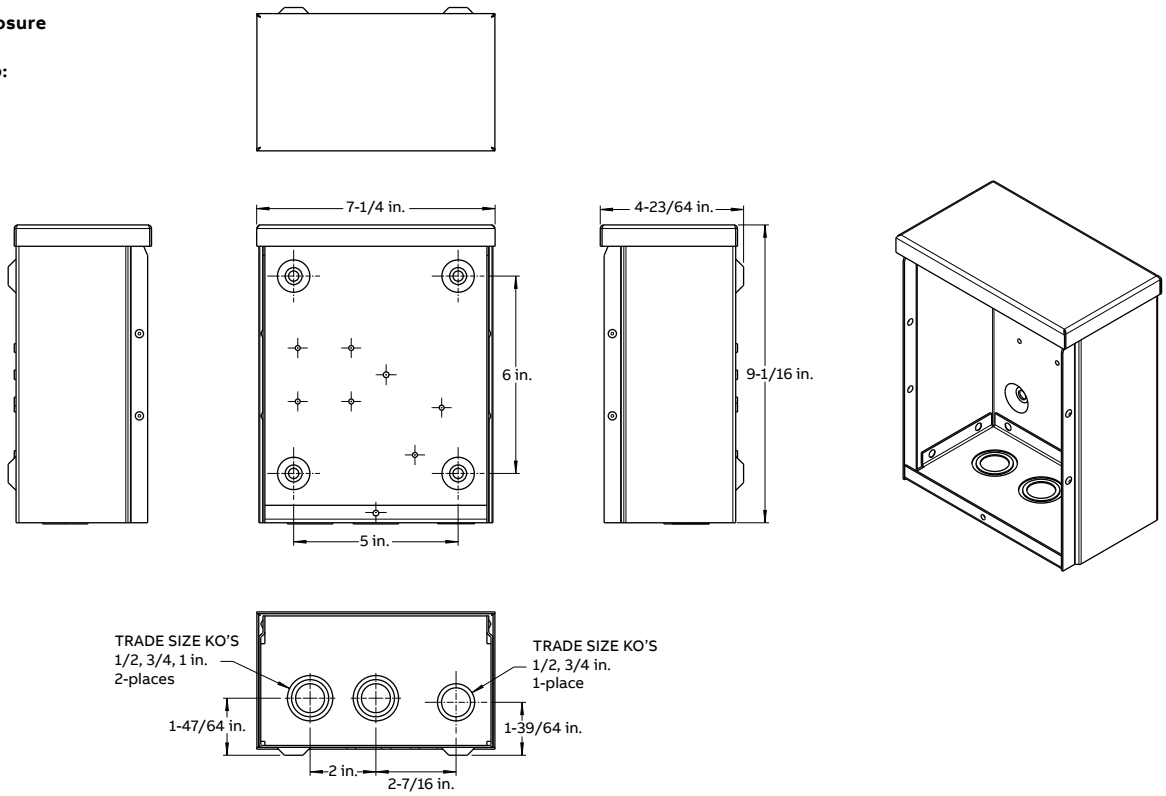

Diagrams
Type 3R Enclosure

Applicable to:
EMEV-S82-0

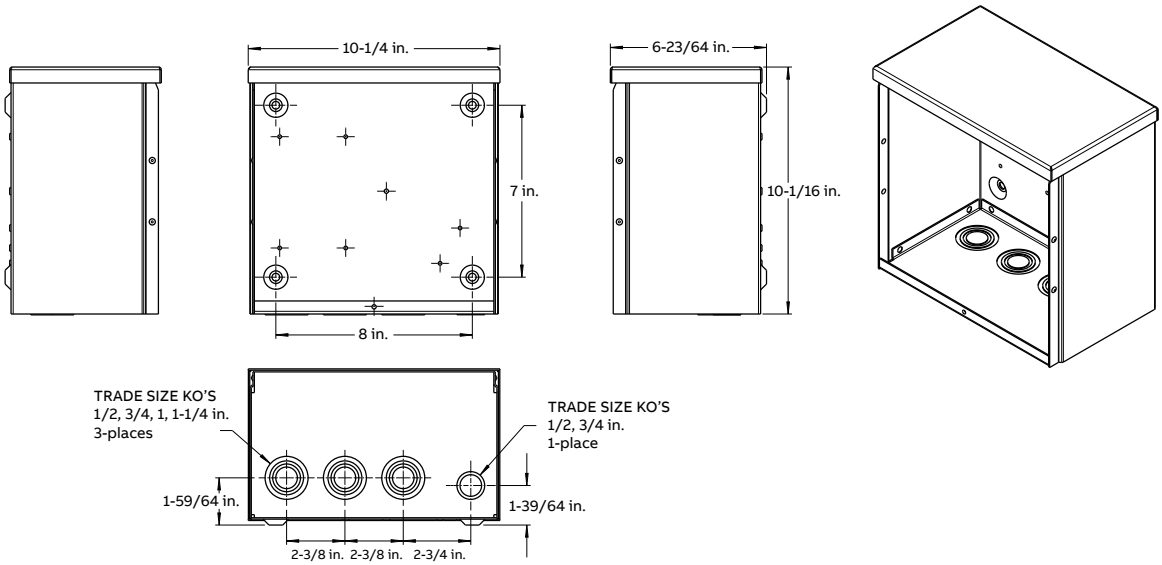

EMEV-D Series

Dual load EVEMS for 100 A/200 A main entrance

Product specifications

- Type 3R enclosure for indoor and outdoor use
- Compact size that allows for easy installation in tight spaces
- D5 EM series models can control two 50 A max EV chargers
- Real-time current monitoring for service entrances rated up to 100 A or 200 A
- The intelligent algorithm will efficiently manage the two loads
- Easy and fast installation
- Exclusive patented technology for smart monitoring and controlling

EMEV-D51-0

Cat. no.	Service entrance to be monitored	EV charger to be controlled	Enclosure type	Operation temperature	Voltage	Frequency	Main lug wire size	Weight lb (kg)
EMEV-D51-0	60-100 A 208, 240 VAC or 120/208 120/240 VAC	10 to 50 A per contactor	Type 3R	-4°F to 104°F (-20°C to 40°C)	208/240 VAC single phase	50 – 60 Hz	14 – 4 AWG (Cu only)	9 (4.1)
EMEV-D52-0	125-200 A 208 Volts, 240VAC or 120/208, 120/240 VAC							

Diagrams

Applicable to:
EMEV-D51-0
EMEV-D52-0

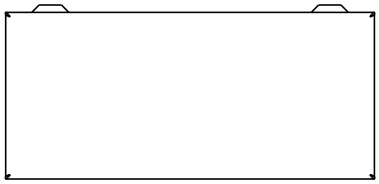

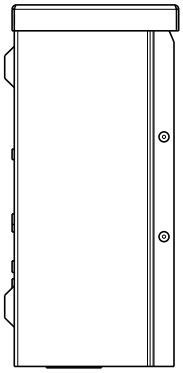

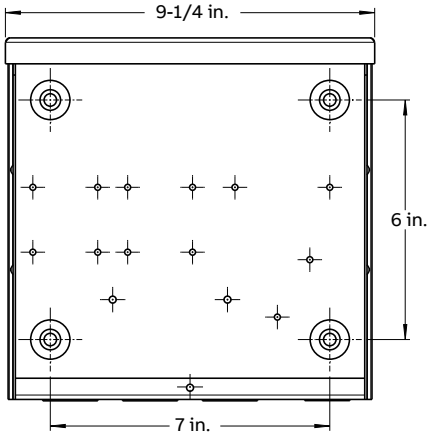

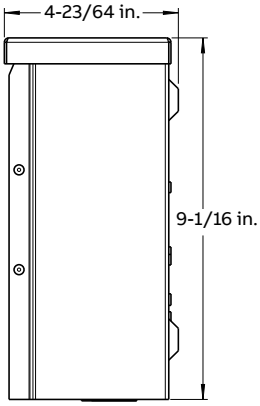

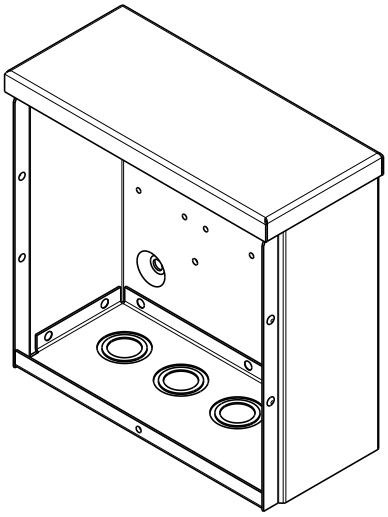

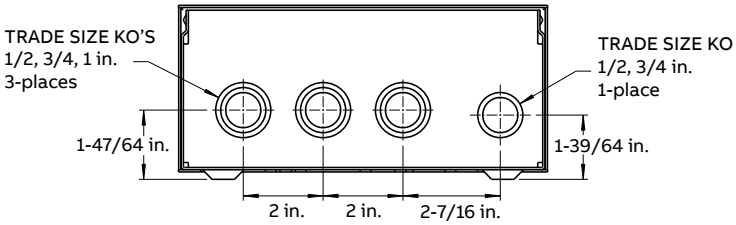

EMEV-H Series

Multi-residential EVEMS HUB for 200 A main entrance

Product specifications

- Type 3R enclosure for indoor and outdoor use
- Easy and fast installation
- Compact size that allows for easy installation in tight spaces
- Monitors multi-residential building main entrance to prevent overloading
- Controls simultaneously up to 6 units of S5 EM series (single load) EVEMS
- The shift time function ensures all dwellings in a multi-residential building have equal access to charging
- No power connection from HUB to main utility feed
- Automatically detects the number of EM series EVEMS devices that are connected

EMEV-H62-0

Cat. no.	Service entrance to be monitored	EV charger to be controlled	Enclosure type	Operation temperature	Device voltage	Device current
EMEV-H62-0	200 A 208 Volts, 240VAC or 120/208, 120/240 VAC	12 – 48 A	Type 3R	-4°F to 104°F (-20°C to 40°C)	5 VDC Class 2	0.5 A
EMEV-H64-0	400 A 208 Volts, 240VAC or 120/208, 120/240 VAC					
EMEV-H66-0	600 A 208 Volts, 240VAC or 120/208, 120/240 VAC					

Diagrams

Applicable to:
EMEV-H62-0
EMEV-H64-0
EMEV-H66-0

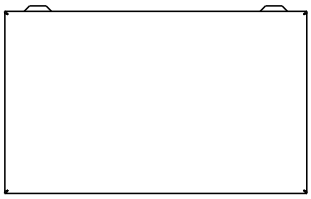

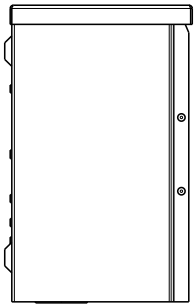

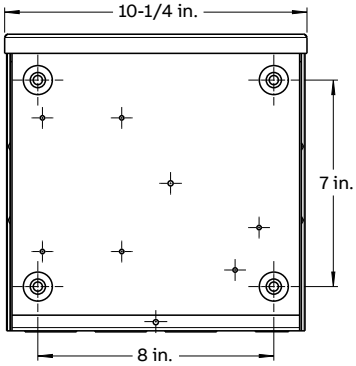

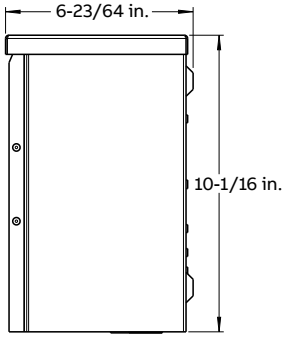

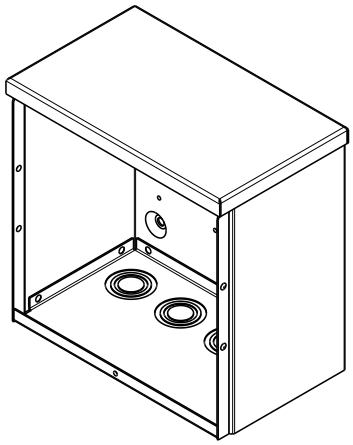

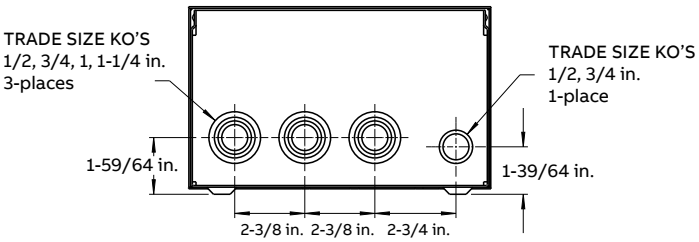

Tools

Essential tools for optimal product installation

- Ensure your installation is functioning correctly
- Apply the correct torques to prevent future issues

Handheld – Operational testing device

- Specifically designed to verify EM series EVEMS proper operation during installation or maintenance
- Simulates main electrical service load (home energy consumption) from 0% to 100%
- Facilitates troubleshooting, demonstration and maintenance

Cat. no.	Description	Compatible with
EMEV-OTD	EVEMS Operational Testing Device	EMEV-S51-0, EMEV-S51-1, EMEV-S52-0, EMEV-S52-1, EMEV-S82-0, EMEV-D51-0, EMEV-D52-0, EMEV-H6

Adjustable torque screwdriver

- Provides the right torque for the different fasteners
- Clicks when the desired torque is reached
- Adjustable from 4 in-lbs. (0.5 Nm) to 53 in-lbs (6 Nm)
- 0.1 Nm precision scale for right setting
- Full set of ¼” bits and foam protected case included
- Proper torque for connection points is required When not properly se-cured, connections hot spots can be developed as well as abnormal noise, unreliable operation and premature failure.

Cat. no.	Description
EMEV-ATS	Adjustable Torque Screwdriver

Carlon nonmetallic conduits

Schedule 40 PVC rigid nonmetallic conduits

Product specifications
Certified for underground applications encased in concrete or direct burial. Also for use in exposed or concealed above-ground applications.

- Sunlight resistant
- Rated for use with 75 ˚C conductors
- Superior weathering characteristics
- Meets CSA standard
- ¾ in. – 4 in. are FT-4 rated

Guy strain insulator

Cat. no.	Nom. size (in.)	Std. crate qty. 10 ft.	Std. bundle qty. 10 ft.	Wt. per 100 ft. (lb)	Dimensions (in.) O.D.	Dimensions (in.) I.D.
10 ft.						
49009CC-010	1¼	3,300	50	46	1.660	1.380
49010CC-010	1½	1,800	50	55	1.900	1.610
49011CC-010	2	1,400	50	73	2.375	2.067

Acceptable dimensions in inches of CSA listed integral bell

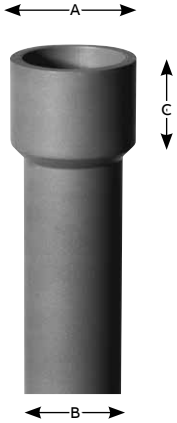

Nom. size (in.)	A at entrance (in.) Maximum	A at entrance (in.) Minimum	B at bottom (in.) Maximum	B at bottom (in.) Minimum	C socket depth (in.) Maximum	C socket depth (in.) Minimum
1¼	1.689	1.665	1.667	1.643	2.00	3.938
1½	1.930	1.906	1.906	1.882	2.00	1.062
2	2.405	2.381	2.381	2.357	2.00	1.125

For more information or for other sizes, contact your regional sales office

Carlon nonmetallic conduits

Schedule 40 PVC rigid nonmetallic conduits

Service entrance caps

Cat. no.	Size (in.)	Std. ctn.	Dimensions (in.) E	F	G	H
E998G	1¼	20	3.52	0.74	0.71	0.50
E998H	1½	10	3.52	0.74	0.71	0.50
E998J	2	5	4.26	0.83	0.78	0.56

Diagram

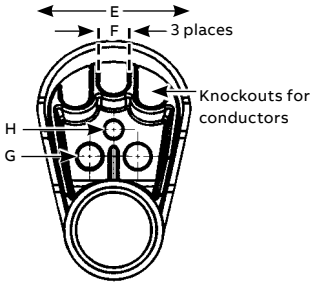

Meter offset

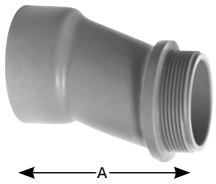

Cat. no.	Size (in.)	Std. ctn.	Offset (in.)	A (in.)
E995G	1¼	20	0.758	4.230

Schedule 40 elbows – Std. radius

Cat. no.	Size (in.)	Belled end std. ctn.
UA9AGCBUPC	1¼	20
UA9AHCBUPC	1½	25
UA9AJCBUPC	2	20

Diagram

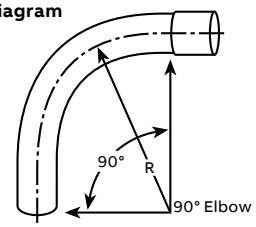

Available in plain and integral belled end for use with nonmetallic solvent weld fittings. Custom elbows available on request.

Integral belled end dimensions

Trade size (in.)	A at entrance (in.) Max.	Min.	B at bottom (in.) Max.	Min.	C socket depth (in.) Max.	Min.
1¼	1.689	1.665	1.667	1.643	2.000	0.938
1½	1.930	1.906	1.906	1.882	2.000	1.062
2	2.405	2.381	2.381	2.357	2.000	1.125

Diagram

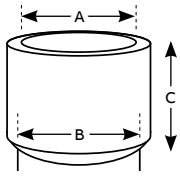

2-Hole nonmetallic clamps

Cat. no.	Sizes in. (mm)	Std. ctn. (lb)	Dimensions in. (mm) A	B	C	D	E	F	G	H	J
E977GC	1¼ (35)	50	1.714 (43.5)	2.68 (68.0)	3.28 (83.3)	0.64 (16.2)	0.15 (3.8)	0.83 (21.0)	1.687 (42.8)	1.89 (48.0)	0.320 (8.1)
E977HC	1½ (41)	50	1.920 (48.7)	2.82 (71.6)	3.44 (87.3)	0.70 (17.7)	0.15 (3.8)	0.97 (24.6)	1.930 (49.0)	2.12 (53.8)	0.312 (7.9)
E977JC	2 (53)	25	2.54 (64.5)	3.54 (89.9)	4.18 (106.1)	0.76 (19.3)	0.16 (4.0)	1.05 (26.6)	2.29 (58.1)	2.49 (63.2)	0.315 (8.0)
E977LCCAR	3 (78)	20	3.47 (88.2)	5.00 (127.0)	6.00 (152.4)	1.00 (25.4)	0.20 (5.08)	1.74 (44.3)	3.48 (88.4)	3.70 (94.0)	0.360 (9.14)

Diagrams

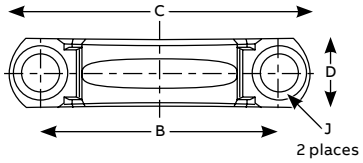

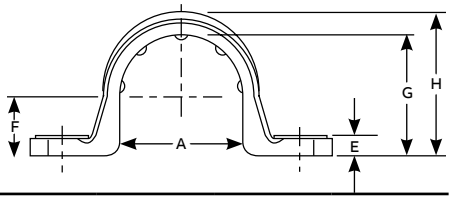

Nonmetallic clamps offer the same chemical resistance as Carlon nonmetallic conduits for a complete, corrosion resistant system. UV inhibited for use in direct sunlight. For more information or other sizes, contact your regional sales office

Carlon nonmetallic conduits

Rigid nonmetallic conduits

Conduit bodies – Type LB

Cat. no.	Size (in.)	Std. ctn.	C Typical (in.)	Max. L1 (in.)	Typical (in.) L2	Typical (in.) L3	Max. H (in.)	Max. Q (in.)	Max. W (in.)	Vol. (cu. in.)
E986G	1¼	10	1 3/32	7 31/32	6 13/32	6	2 5/16	2½	2¾	32.0
E986H	1½	10	1 3/32	7 31/32	6 13/3	6	2 5/16	2½	2¾	32.0
E986J	2	10	1 3/32	9 31/32	6 13/32	7¼	2 5/16	3 5/32	3 15/32	63.0

Diagrams

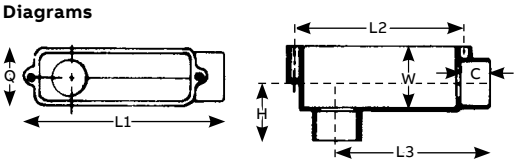

Male terminal adapters

Cat. no.	Size (in.)	Std. ctn.	Typical (in.) A	Typical (in.) B	Min. D (in.)	Max. OD (in.)	Typical (in.) C	Typical (in.) S	Typical (in.) L
E943G	1¼	50	1.677	1.655	1.345	1.973	1.208	0.816	1.986
E943H	1½	25	1.918	1.894	1.574	2.188	1.155	0.802	2.105
E943J	2	50	2.393	2.369	1.998	2.713	1.145	0.825	2.093
E943L	3	45	3.515	3.492	2.989	3.965	1.643	0.797	2.660

Diagram

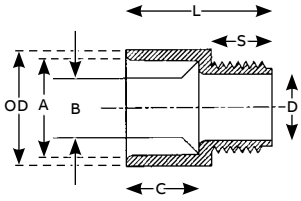

For adapting nonmetallic conduits to boxes, threaded fittings, metallic systems. Male threads on one end, socket end on other.

Iberville® steel locknuts

Cat. no.	Trade size (in.)
CI1710	1¼
CI1712	1½
CI1716	2
CI1724	3

PVC conduit to DB/2 duct adapter

Cat. no.	Size (in.)	Std. ctn.
CE942RL	3	1

Expansion fitting

Cat. no.	Size (in.)	Std. ctn.	Travel length (in.)
E945L	3	10	8

Carlon PV-Mold

Nonmetallic pole riser system

—
01 Steel U-guard requires grounding strapping and does not have belled ends.
—
02 PV-Mold has belled ends, flanged design and does not require grounding.

—
01

—
02

Carlon PV-Mold is a nonmetallic pole riser system designed to protect communications power cable installed on poles.

Product specifications

- Meets or exceeds requirements outlined in the National Electric Safety Code (NESC)
- Designed in accordance with NEMA TC-19 specifications
- Ultraviolet, cold-temperature and corrosive-atmosphere resistant
- No grounding required
- Belled end fits over each added section or conduit
- Requires no maintenance
- PV-Mold acts as an insulator against electrical shock
- Interchangeable parts and accessories to match specific requirements

Size (in.)	Depth of bell (in.)
1	2–2¼
1½	2–2¼
2	2–2¼
3	3–3¼
4	4–4¼
5	4–4½
6	5–5½

Diagram

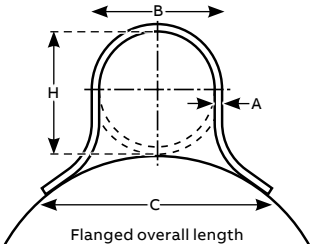

Flanged overall length 10 ft., including bell

Slots are ½ in. from side to side, and allow for expansion and contraction. Slot dimensions: for sizes 2 in. through 6 in. are 5/16 in. wide, ¾ in. long. Slot dimensions: for 1 in. and 1½ in. are 3/16 in. wide, ¾ in. long. Slot spacing: 18 in. from center, beginning 6 in. from end.

Cat. no.	Size (in.)	Std. ctn.	Std. ctn. wt. (lb)	Dimensions (in.) A	B	C	H	Actual impact at 0 °C 20 pound tup (ft.–lb)
Standard-duty								
59208N	1	294	1,059	0.100	1⅝	2⅜	1⅝	40
59211N	2	136	726	0.100	2⅜	4½	2⅜	100
59213N	3	66	761	0.150	3½	6	3½	110
59215N	4	65	910	0.150	4½	6½	4½	110
59216N	5	30	515	0.150	5½	7½	5½	110
Heavy-duty schedule 40								
59010N	1½	200	1,142	0.145	22 29/32	3½	1 29/32	100
59011N	2	136	1214	0.154	2⅜	4½	2⅜	150
59013N	3	66	937	0.216	3½	6	3 9/32	150
59015N	4	65	1621	0.237	4½	6½	4½	260
59016N	5	30	870	0.258	5½	7½	5½	260
59017N	6	30	1,160	0.280	6⅝	8¾	6⅝	260

For more information on PV-Mold, contact your regional sales office.

Carlon PV-Mold

PV-Mold installation and fittings

Polyethylene vented boots and adapters

Note:
1. A field cut may be needed to accommodate different boot or adapter to Carlon U-Mold size combinations.
2. Recommendation: 2 sets of mounting holes per boot/fitting. To add mounting holes, use a ⅜ in. drill bit and drill out where needed.
3. When 3 in. or smaller conduit is being used, it's recommended that the bottom (largest section) of the boot or adapter section be buried 2 in. to 3 in. below ground surface.

Vented boots

Cat. no.	Size (in.)	Dimensions (in.) A	B	C	D	E	Std. ctn.	Std. ctn. wt. (lb)
E938JR	2 x 6	20.50	4.80	6.13	6.20	–	4	13.5
E938NT	4 x 8	21.00	15.00	11.34	9.76	–	4	21.0
E938NRR	4 x 6	20.87	16.57	12.87	11.68	11.43	6	26.4
E938PRR	5 x 6	16.74	3.65	10.84	11.43	–	6	23.2

Diagrams

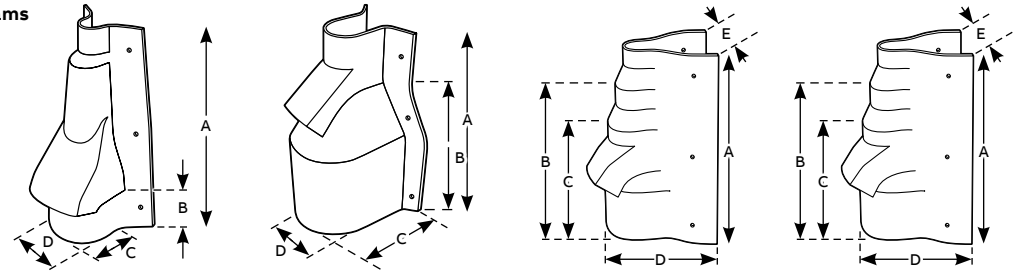

E938JR E938NT E938NRR E938PRR

Adapters

Cat. no.	Size (in.)	Dimensions (in.) A	B	C	D	Std. ctn.	Std. ctn. wt. (lb)
E939JN	2 x 4	11.00	6.75	5.88	5.07	8	10.0
E939NR	4 x 6	11.00	6.75	7.08	7.13	6	11.7

Cat. no.	Size (in.)	Dimensions (in.) A	B	C	D	E	Std. ctn.	Std. ctn. wt. (lb)
E939NRT	4 x 6	19.75	4.25	12.50	8.50	7.40	63	14.0

Diagrams e939jn

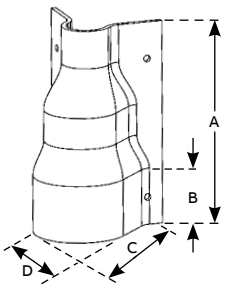

Diagrams e939jn

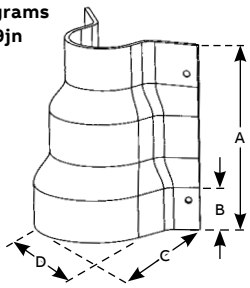

Diagram e939nrt

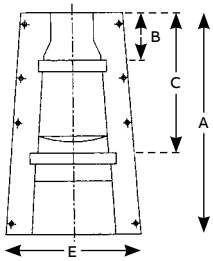

Carlon PV-Mold

PV-Mold installation and fittings

Duct to riser fittings

	Cat. no.	Size (in.)	Std. ctn.	Std. ctn. wt. (lb)
	E939NL	4 x 3	15	5.6

Backing plates

				Dimensions (in.)				
	Cat. no.	Size (in.)	Length (ft.)	A	B	C	Std. ctn.	Std. ctn. wt. (lb)
	59111	2	10	1/16	13/16	2 1/8	1	1.2

Diagram

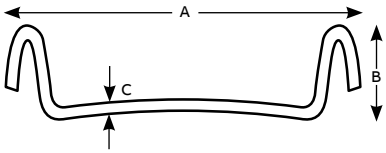

Carlon PV-Mold

PV-Mold installation instructions

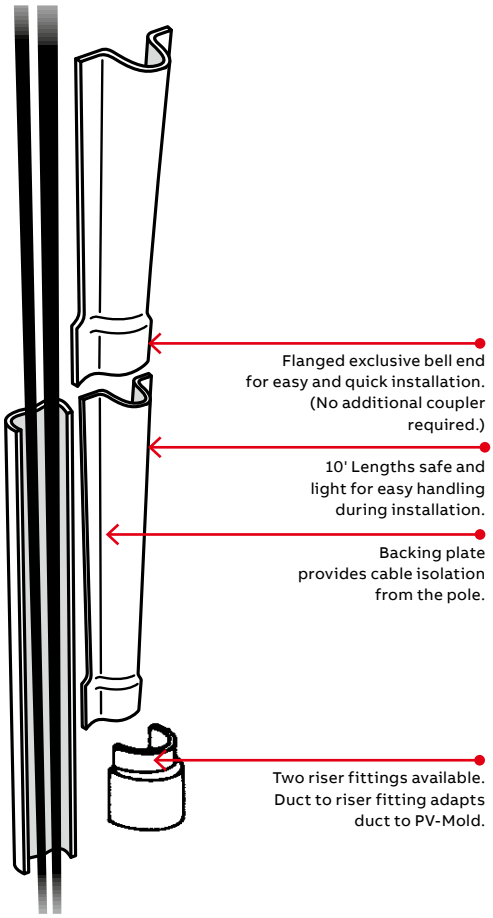

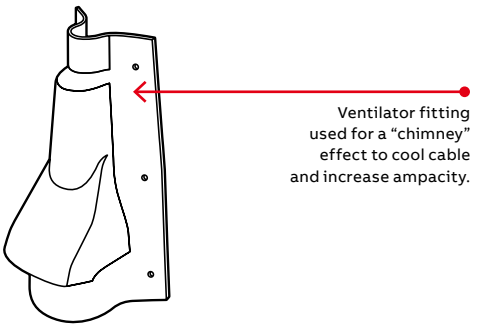

Installation is easy with PV-Mold pole risers:

1. Install ventilator or duct to riser fittings at the base of the pole.
2. Nail backing plate sections to the surface of the pole. Three nail holes are provided in each section. Place the "U" sections over the cable and backing plate, with belled end at the bottom, and attach using ¼ in. lag bolts.

Field installation instructions for Carlon PV-Mold adapters (for adapters E939JN, E939NR, E939NRT)

E939JN	
To transition from 4 in. conduit to 2 in. PV-Mold	Place adapter over conduit, attach to pole using the top and bottom mounting holes, place PV-Mold over top section of adapter and secure PV-Mold to pole.
To transition from 4 in. conduit to 3 in. PV-Mold	Measure 6.3 in. up from bottom (large end) of adapter and cut. Assemble to pole as described above.
To transition from 3 in. conduit to 2 in. PV-Mold*	Measure 4.75 in. up from bottom (large end) of adapter and cut. Assemble to pole as described above.

E939NR	
To transition from 5 in. conduit to 4 in. PV-Mold	Place adapter over conduit, attach to pole using the top and bottom mounting holes, place PV-Mold over top section of adapter and secure PV-Mold to pole.
To transition from 6 in. conduit to 5 in. PV-Mold	Measure 7.25 in. up from bottom (large end) of adapter and cut. Assemble to pole as described above.
To transition from 5 in. conduit to 5 in. PV-Mold*	Measure 4.5 in. down from the top of adapter and cut. Assemble to pole as described above.

E939NRT	
To transition from 6 in. conduit to 4 in. PV-Mold	Place adapter over conduit and attach to pole using the top and bottom mounting holes. Place PV-Mold over top section of adapter and secure PV-Mold to pole.
To transition from 6 in. conduit to 5 in. PV-Mold	Measure 5.25 in. down from the top of the adapter and cut. Assemble to pole as described above.
To transition from 6 in. conduit to 6 in. PV-Mold*	Measure 9.5 in. up from the bottom of the adapter and cut. Assemble to pole as described above.

* For these transitions, it is not necessary to cut the adapter if desired. If the adapter is not modified, it is recommended that the bottom 3 in. of the adapter be buried below grade.

Diagrams

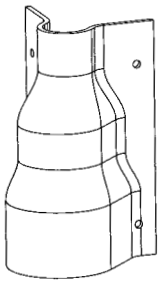

E939JN

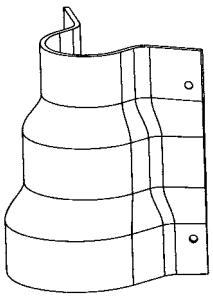

E939NR

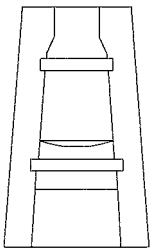

E939NRT

Carlon PV-Mold

PV-Mold installation instructions

Field installation instructions for Carlon PV-Mold adapters. For vented boots (E938JR, E938NT, E938NRR, E938PRR).

E938JR	
To transition from 5 in. or smaller conduit to 2 in. PV-Mold	Place vented boot over conduit, attach to pole using the top and bottom mounting holes, place PV-Mold over top section of vented boot and secure PV-Mold to pole.
To transition from 5 in. or smaller conduit to 3 in. and larger PV-Mold	For 3 in. PV-Mold: Measure 3.75 in. from the top of the boot and cut. Place the boot over the conduit and attach to the pole. Place belled end of PV-Mold over the top end of the boot and secure.

For 4 in. and 5 in. PV-Mold: Measure 12 in. up from the bottom of the boot and cut. Place the boot over the conduit and attach to the pole. Place the belled end of the PV-Mold against the top edge of the vent protrusion and secure to the pole.

E938NT	
To transition from 6 in. to 8 in. conduit to 4 in. PV-Mold	Place boot over conduit and attach to the pole using the mounting holes. Place PV-Mold over top section of vented boot and secure to the pole.

It is recommended that for conduit sizes smaller than 8 in., the bottom 3 in. of the boot be buried below grade. The E938NT can also be used to transition multiple smaller conduits to PV-Mold.

E938NRR	
To transition from 6 in. or smaller conduit to 4 in. PV-Mold	Place vented boot over conduit and attach to pole using the top and bottom mounting holes. Place PV-Mold over top section of vented boot and secure PV-Mold to pole.
To transition from 6 in. or smaller conduit to 5 in. PV-Mold	Measure 4.125 in. down from the top of the vented boot and cut. Assemble to pole as described above.
To transition from 6 in. or smaller conduit to 6 in. PV-Mold*	Measure 8.25 in. down from the top of the vented boot and cut. Assemble to pole as described above.

E938PRR	
To transition from 6 in. or smaller conduit to 5 in. PV-Mold	Assemble to pole as described above.

* For these transitions, it is not necessary to cut the adapter if desired. If the adapter is not modified, it is recommended that the bottom 3 in. of the adapter be buried below grade.

Diagrams

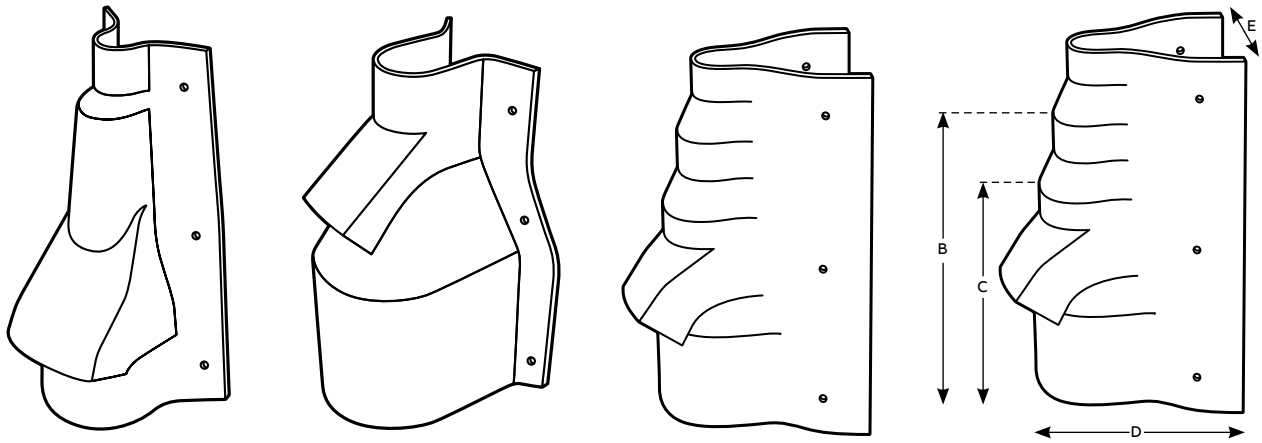

E938JR E938NT E938NRR E938PRR

EZGround grounding systems

Waterpipe ground clamps

Cat. no.	Ground wire size (AWG)	Water pipe size (in.)
2-TB	#6, #4, #2	½, ¾, 1 or rebar 4–10
3-TB	#6, #4, #2	1¼, 1½ or 2
4	#6, #4, #2	2½, 3 or 3½
5-TB	#6, #4, #2	4, 4½ or 5
6	#6, #4, #2	6

Malleable iron crossbar, steel U-bolt, comes with copper cable clamp with serrations

Waterpipe ground clamps

Cat. no.	Ground wire size (AWG)	Water pipe size (in.)
3902	#4–4/0	½–1
3903	#4–4/0	1¼–2
3904	#4–4/0	2½–3½
3905-TB	#4–4/0	4–5
3906-TB	#4–4/0	6
3907	#4–4/0	8
3908	#4–4/0	10
3909-TB	#4–4/0	12

Material: Steel U-bolt and nut, comes with bronzed aluminum cap and crossbar cadmium plated plus gold chromate finish.

Waterpipe ground clamps

Cat. no.	Ground wire size (AWG)	Water pipe size (in.)
3902BU*	#4–4/0	½–1
3903BU*	#4–4/0	1¼–2
3904BU*	#4–4/0	2½–3½
3905BU*	#4–4/0	4–5
3906BU*	#4–4/0	6
3907BU*	#4–4/0	8
3908BU*	#4–4/0	10
3909BU*	#4–4/0	12

Material: Bronze U-bolt and nut, complete with bronzed aluminum cap and crossbar with a bright dip finish. *UL Listed for direct burial

Ground clamps

Cat. no.	Material	Water pipe, copper tubing size (in.)	Ground rod size (in.)
3826*	Malleable iron	½, ¾	½–1
3846*	Bronze		
3849**	Brass	½–1	–
3840-TB•	Malleable iron	½, ¾ or 1	–

* For unarmoured copper wires #6, #4 AWG. ** For copper and aluminum conductors; for #14 through #2 AWG unarmoured copper wires for corrosive and outdoor use. UL approved for direct burial.
• #8 through #4 AWG. Not CSA certified.

Ground clamps for K&L grade copper tubing only

Cat. no.	Ground wire size (AWG)	Water pipe, copper tubing size (in.)
3844*	#8–#4	½–1
3888**	#8–#4	½–1, also rebar 4–10

* With steel screws. ** UL approved for direct burial. Silicon bronze screws.

EZGround grounding systems

Galvanized grounding plates

- Made of high-quality steel, hot dip galvanized
- Major time and cost saving versus ground rods

	Cat. no.	Description	Wire range (AWG)	Std. pkg.
1016TB - 1016BTB	1016TB	Galvanized grounding plate	8 sol. to 4/0 str.	1
	1016BTB	Galvanized grounding plate (complete with JAB34C connector)	8 sol. to 4/0 str.	1
	1016TB-NG*	Grounding plate (not galvanized)	8 sol. to 4/0 str.	1
	1016BTB-NG*	Grounding plate (not galvanized) (complete with JAB34C connector)	8 sol. to 4/0 str.	1

* CSA not applicable.

Ground electrode boxes

	Cat. no.	Description
51628 - 51629	51628	Pregalvanized steel
	51629	Hot dip galvanized steel

14 gauge steel, 10 in. diameter, 12 in. depth.

Knurling dies for 14- and 15-ton tools

	Cat. no.	Description
240-31565-94	15508	For ⅝ in. and ¾ in. ground rods

Hand knurling tool for all ground rods

Used to knurl ground rods in order to increase the pullout value of the compression connection by as much as 20%.

EZGround grounding systems

Ground rods

Galvanized ground rods

- Made of high-strength quality cold drawn steel, (1035) hot dip galvanized
- Meets ANSI CI35.30-1979 requirements
- Stainless steel rods are also available (for more detailed information, contact your ABB regional sales office)

Cat. no.	Trade size in.	Trade size ft.	Rod size (nominal diameter x length) mm	Rod size (nominal diameter x length) m	Plating thickness (mils)	Std. pkg.	Weight per 100 lb	Weight per 100 kg
GR5006	½	6	12.7	1.8	4	10	410	186
GR6256	⅝	6	15.8	1.8	4	5	600	272
GR6258	⅝	8	15.8	2.4	4	5	800	363
GR6250 (0.543 – 0.555)	⅝	10	15.8	3.0	4	5	1,000	454
GR6260 (0.625 – 0.640)	⅝	10	15.8	3.0	4	5	1,000	454
GR6250B* (0.618 – 0.623)	⅝	10	15.8	3.0	4	5	1,000	454
GR7506	¾	6	15.8	1.8	4	5	700	318
GR7508	¾	8	19.0	2.4	4	5	1,200	545
GR7510	¾	10	19.0	3.0	4	5	1,500	681

* B suffix denotes black iron bare steel ground rod (CSA not applicable). CSA lists rods ½ in. and larger, 10 ft. and longer.

Copper bonded steel ground rods

- All EZGround ground rods have a heavy uniform covering of electrolytic copper bonded to a rigid steel core
- Copper ions are forced electrically to join with the steel core, establishing a corrosion-resistant bond between the copper and the steel

Cat. no.	Trade size in.	Trade size ft.	Rod size (nominal diameter x length) mm	Rod size (nominal diameter x length) m	Plating thickness (mils)	Std. pkg.	Weight per 100 lb	Weight per 100 kg
5005	½	5	12.7	1.8	5	10	305	138
5006	½	6	15.8	1.8	5	5	370	168
5008	½	8	15.8	2.4	5	5	545	247
5010	½	10	15.8	3.0	5	5	611	277
6256	⅝	6	15.8	3.0	5	5	508	230
6258*	⅝	8	15.8	3.0	10	5	678	308
6260*	⅝	10	15.8	1.8	10	5	847	384
7508*	¾	8	19.0	2.4	10	5	992	450
7510*	¾	10	19.0	3.0	10	5	1,240	462
1010*	1	10	25.4	3.0	10	1	2,248	1,020

* Ground rods are UL listed (425H), except for regular rods shorter than 8 ft. or less than ½ po CSA lists rods ½ po and larger, 10 ft. and longer.

EZGround grounding systems

Ground rods

Sectional type ground rods

- Sectional type ground rods have the same high-quality as regular copper bonded steel ground rods, and are threaded top and bottom

Cat. no.	Trade size in.	Trade size ft.	Rod size (nominal diameter x length) mm	Rod size (nominal diameter x length) m	Plating thickness (mils)	Thread size (in.-UNS)	Std. pkg.	Weight per 100 lb	Weight per 100 kg
5006LS	½	6	12.7	1.8	10	9/16–12	5	410	189
5008LS	½	6	15.8	1.8	10	9/16–12	5	546	248
5010LS	½	8	15.8	2.4	10	9/16–12	5	682	309
6256S	⅝	6	15.8	3.0	5	⅝–11	5	481	230
6258S	⅝	8	15.8	3.0	10	⅝–11	5	670	308
6260S	⅝	10	15.8	3.0	10	⅝–11	5	837	384
7506S	¾	6	15.8	1.8	5	¾–10	5	774	160
7508S	¾	8	19.0	2.4	10	¾–10	5	992	450
7510S	¾	10	19.0	3.0	10	¾–10	5	1,040	562
1010S	1	10	25.4	3.0	10	8–1	1	2,248	1,020

CSA lists rods ½ in. and larger, 10 ft. and longer.

Couplings

- Threaded couplings are made of high-strength, corrosion resistant alloy
- Streamlined design reduces driving friction
- Couplings are tapped for use on all standard threaded sectional rods

Cat. no.	Rod diameter (in.)	Thread size (in.-UNS)	Std. pkg.	Weight per 100 (lb)
50LC	½	9/16–12	25	17
60C	⅝	⅝–11	25	25
70C	¾	¾–10	25	38
80C	1	1–8	10	75

EZGround grounding systems

Ground rods

Driving studs

- Driving studs of high-strength steel
- May be used with all standard threaded couplings

Cat. no.	Rod diameter (in.)	Thread size (in.-UNS)	Std. pkg.	Weight per 100 (lb)
50LDS*	½	9/16–12	10	16
60DS*+	⅝	⅝–11	25	23
70DS*	¾	¾–10	5	35
80DS	1	1–8	10	75

* UL Listed
+CSA Certified

Threadless couplings and driving caps for standard copper bonded ground rods

Threadless couplings

- For joining non-threaded, sectional, copper bonded, steel ground rods
- Coupling is manufactured of a high-strength, corrosion resistant, silicone bronze

Threadless driving caps

- Prevent “mushrooming” of ground rod while driving to ensure proper fit of coupling
- Driving cap is manufactured of high-strength, hardened steel

Cat. no.	Size (in.)	Dimensions (in.) Length	Dimensions (in.) Diameter	Std. pkg.	Weight per 100 (lb)
Threadless couplings					
50CNT*	½	3.0	0.78	25	34
60CNT2*	⅝	2.5	0.69	25	34
70CNT*	¾	3.0	0.97	25	31
Driving caps					
60DSNT	⅝	4.0	0.88	10	43

* UL Listed

EZGround grounding systems

Clamps

Type JAB — ground rod clamps

- Cast of high-strength corrosion-resistant copper alloy
- Both hex head and socket set screws available
- Long bearing surface of clamp on ground wire secures ground connection
- UL listed for direct burial

Cat. no.		Nominal rod dia.		Wire range							Dimensions (in.)		
Socket set screw	Hex head bolt	(in.)	(mm)	max.	min.	max. (mm²)	min. (mm²)	A (max.) socket screw	A (max.) hex bolt	Screw thread size UNC-2A	B	C	D
JAB12*	JAB12H	1/2	12.7	2 str.	10 sol.	33.6	5.2	1 19/32	2 3/32	7/16-14	27/32	7/8	19/32
JAB58	JAB58H	5/8	15.8	1/0 str.	8 sol.	53.4	8.3	1 27/32	2 13/64	7/16-14	29/32	1	11/16
JAB34	JAB34H	3/4	19.0	1/0 str.	8 sol.	53.4	8.3	2	2 11/32	7/16-14	11/16	1	51/64
–	JAB34C	3/4 + 5/8	15.8 to 19.0	3/0 str.	8 sol.	95.0	8.3	–	2 11/32	7/16-14	1 1/8	1 1/32	13/16
JAB1	JAB1H	1	25.0	4/0 str.	8 sol.	107.1	8.3	2 1/4	3	7/16-14	1 11/32	1 1/16	1

Diagram

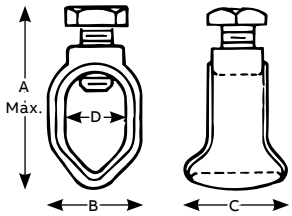

* CSA not applicable. Add suffix P to No de cat. for tin-plated clamp

Type G — budget line ground clamps

- A dependable ground connection offered at a substantial saving
- Cast of high-strength corrosion-resistant copper alloy
- Hex head bolts
- Simplified compact design will make a lasting, trouble-free connection
- Listed for direct burial

	Nominal rod dia.		Wire range						Dimensions (in.)			
Cat. no.	(in.)	(mm)	max.	min.	max. (mm²)	min. (mm²)	A (max.) Bolt	Screw thread size UNC-2A	B	C	D	E
G3*	3/8	9.5	4 str.	10 sol.	21.1	5.2	1 3/8	5/16-18	11/16	1/2	27/64	3/8
G4	1/2	12.7	2 str.	10 sol.	33.6	5.2	–	3/8-16	27/32	3/8	37/64	1/2
G5	5/8	15.8	2 str.	10 sol.	33.6	5.2	–	3/8-16	29/32	3/8	43/64	1/2
G6	3/4	19.0	2 str.	10 sol.	33.6	5.2	–	3/8-16	1 1/16	3/8	13/16	1/2

Diagram

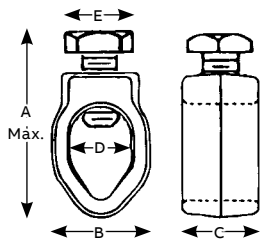

* Not UL Listed and CSA not applicable. Add suffix P to cat. no. for tin-plated clamp

EZGround grounding systems

Clamps

Cast bronze ground clamps

- Connect copper ground wire to water pipe, copper tubing or ground rods
- High-strength, high-conductivity copper alloy (over 80% copper)
- UL listed for direct burial

Cat. no.	Water pipe size (in.)	Conductor range (AWG)
JD	½–1	#2 str.–#10 str.
J2D	1¼–2	#2 str.–#10 str.

Type J — cast bronze ground clamps

- For connecting grounding conductor to water pipe or copper tube
- Cast of high-strength, highly conductive copper alloy
- Screws plated for corrosion resistance
- UL listed

Cat. no.	Water pipe size (in.)	Conductor range (AWG)		Dimensions (in.)		
		Max.	Min.	A	B	C
J	½–1	2 str.	10 sol.	2¾	2 11/32	23/32
J2BB	1¼–2	2 str.	10 sol.	3¾	3½	13/16
J2124	2½–4	2 str.	10 sol.	6	6 5/16	1
J6	4¼–6	2 str.	10 sol.	7¼	8⅛	1

EZGround grounding systems

Clamps

Technical specifications

	Cat. no.	Water pipe size (in.)	Ground wire size (AWG) min.	Ground wire size (AWG) max.	Ground rod size (in.) Galv. steel	Ground rod size (in.) Copper clad
	Ground clamp (zinc alloy body/steel screws)					
	CI3106	½–1	10 sol.	2 str.	⅝–1*	–
	Ground clamp (zinc/steel)					
	CI3108	½–1	10 sol.	2 str.	⅝–1*	–
For connecting grounding conductor to either galvanized steel rod or water pipe.						
	Ground clamp (brass body/brass screws)					
	CI3110U	½–1	10 sol.	2 str.	⅝–1*	⅝–1
For connecting grounding conductor to either galvanized steel rod, copper clad or water pipe. CSA approved for wet locations and for direct burial.						
	Ground clamp (brass body/brass screws)					
	CI3112U	1¼–2	10 sol.	2 str.	–	–
For connecting grounding conductor to water pipe. CSA approved for wet locations and for direct burial.						
	Ground rod clamp (bronze body/brass screws)					
	CIGRC58	–	10 sol.	2 str.	⅝	⅝
	CIGRC34	–	8 sol.	1/0 str.	¾	¾

For connecting grounding conductor to either galvanized steel rod or copper clad rod.
CSA approved for wet locations and for direct burial.
*Reversible.

EZGround types of connectors used in Microlectric meter sockets

Tunnel type connector
A tunnel type connector is made of aluminum and is ideally suited for grounding and bonding applications accommodating both copper and aluminum conductor size #6 AWG to 250 kcmil.

Dual tunnel type connector
A tunnel type connector is made of aluminum and is ideally suited for grounding and bonding applications accommodating both copper and aluminum conductor size #6 AWG to 250 kcmil.

Stud connector
Stud connector is made of zinc-plated steel suited for copper or aluminum wire sizes of #6 AWG to 350 kcmil. Connector is comprised of a stud nut, washer and bell nut.

Lay-in type connector
A lay-in lug is made of aluminum and is ideally suited for grounding and bonding applications accommodating both copper and aluminum conductor sizes #14 AWG to 250 kcmil.

Compression lug
Made of high-conductivity wrought copper. Supplied by utility based on wire size requirements.

Tunnel type connector

Dual tunnel type connector

Stud connector

Lay-in type connector

Compression lug